Workshop Manual

Golf Variant 2007 ➤
Golf Variant 2010 ➤
Jetta 2005 ➤
Jetta 2011 ➤

6-speed manual gearbox 02Q

Edition 06.2010

Protected by copyright. Copying for private or commercial purposes, in part or in whole, is not permitted unless authorised by Volkswagen AG. Volkswagen AG does not guarantee or accept any liability with respect to the correctness of information in this document. Copyright by Volkswagen AG.

Downloaded from www.Manualslib.com manuals search engine

List of Workshop Manual Repair GroupsList of Workshop Manual Repair GroupsList of Workshop Manual Repair Groups

Repair Group

00 - Technical data
30 - Clutch
34 - Controls, housing
35 - Gears, shafts
39 - Final drive - differential

Copyright Copying for private or commercial purposes, in part or in whole, is not permitted unless authorised by Volkswagen AG. Volkswagen AG does not guarantee or accept any liability with respect to the correctness of information in this document.

Technical information should always be available to the foremen and mechanics, because their careful and constant adherence to the instructions is essential to ensure vehicle road-worthiness and safety. In addition, the normal basic safety precautions for working on motor vehicles must, as a matter of course, be observed.

All rights reserved.
No reproduction without prior agreement from publisher.

Copyright © 2010 Volkswagen AG, Wolfsburg

Downloaded from www.Manualslib.com manuals search engine

Contents

00 - Technical data 1

1 Gearbox identification 1
1.1 Location on gearbox 1
1.2 Identification code, assembly allocation and capacities 1

2 Overview - power transmission 5

3 Calculating overall gear ratio „i“ 7

4 General repair notes 8
4.1 Contact corrosion! 8
4.2 Special tools 8
4.3 Components 8

30 - Clutch 12

1 Fault finding, power transmission 12

2 Repairing clutch mechanism 13
2.1 Overview 13
2.2 Assembly overview - pedal cluster 14
2.3 Removing and installing over-centre spring 15
2.4 Removing and installing clutch pedal 19
2.5 Removing and installing mounting bracket 23
2.6 Removing and installing master cylinder 29
2.7 Removing and installing clutch position sender G476 30
2.8 Assembly overview - hydraulics (LHD) 34
2.9 Assembly overview - hydraulics (RHD) 36
2.10 Bleeding clutch system 37

3 Repairing clutch release mechanism 39
3.1 Removing pipe/hose line and bleeder from and installing on slave cylinder 40
3.2 Removing and installing slave cylinder with release bearing 40
3.3 Removing and installing pipe/hose line or plastic line 41
3.4 Renewing input shaft seal 43

4 Repairing clutch - vehicles with turbo diesel engine 45
4.1 Determining clutch manufacturer 45
4.2 Removing and installing „Sachs“ clutch 47
4.3 Repairing „Sachs“ clutch 50
4.4 Removing and installing „LuK“ clutch 50
4.5 Repairing „LuK“ clutch 53

5 Repairing clutch - vehicles with petrol engine 54
5.1 Repairing clutch 55
5.2 Removing and installing clutch 55

34 - Controls, housing 59

1 Repairing selector mechanism 59
1.1 Installation position of selector mechanism 59
1.2 Overview of selector mechanism 60
1.3 Removing and installing gear knob and frame 62
1.4 Removing and installing gaiter with gear knob and noise insulation 62
1.5 Repairing gear lever and selector housing (through 10.06) 64
1.6 Repairing gear lever and selector housing (from 11.06) 66
1.7 Assembly overview - removing and installing selector cables 71
1.8 Plastic relay lever 75
1.9 Removing and installing selector mechanism 78
1.10 Removing and installing gear selector cable and gate selector cable 80
1.11 Adjusting selector mechanism 82

Downloaded from www.Manualslib.com manuals search engine

2 Removing and installing gearbox in vehicles with turbo diesel engine . . . 85
2.1 Removing gearbox . . . 85
2.2 Transporting gearbox . . . 96
2.3 Installing gearbox . . . 97
2.4 Specified torques . . . 104
3 Removing and installing gearbox, vehicles with petrol engine . . . 106
3.1 Removing gearbox . . . 106
3.2 Transporting gearbox . . . 116
3.3 Installing gearbox . . . 117
3.4 Specified torques . . . 124
4 Checking gearbox oil . . . 126
5 Dismantling and assembling gearbox . . . 128
5.1 Overview - rear final drive . . . 128
5.2 Assembly overview . . . 129
5.3 Removing and installing gearbox housing and selector mechanism . . . 130
5.4 Removing and installing input shaft, output shafts, differential and selector rods . . . 132
5.5 Assembly order, gearbox »without« retaining ring A for input shaft sealing cover . . . 134
5.6 Assembly order, gearbox »with« retaining ring A for input shaft sealing cover . . . 145
6 Repairing gearbox housing . . . 157
7 Repairing clutch housing . . . 167
8 Repairing selector unit . . . 172
8.1 Renewing oil seal for selector shaft . . . 173
9 Repairing selector forks . . . 175

35 - Gears, shafts . . . 178
1 Input shaft . . . 178
1.1 Dismantling and assembling input shaft . . . 178
2 Output shaft for 1st through 4th gears . . . 185
2.1 Assembly overview - output shaft for 1st through 4th gears . . . 185
2.2 Dismantling and assembling output shaft for 1st through 4th gears . . . 187
2.3 Adjusting output shaft for 1st through 4th gears . . . 206
3 Output shaft for 5th, 6th and reverse gears . . . 211
3.1 Dismantling and assembling output shaft for 5th, 6th and reverse gears . . . 211
3.2 Adjusting output shaft for 5th, 6th and reverse gears . . . 222

39 - Final drive - differential . . . 227
1 Renewing flange shaft oil seals with gearbox installed . . . 227
1.1 Renewing oil seal for left flange shaft . . . 227
1.2 Renewing seal for right flange shaft . . . 229
2 Adjustment overview . . . 232
3 Differential . . . 233
3.1 Dismantling and assembling differential . . . 233
3.2 Adjusting differential . . . 239

Protected by copyright. Copying for private or commercial purposes, in part or entirely, not permitted unless authorised by Volkswagen AG. Volkswagen AG does not guarantee or accept any liability with respect to the correctness of information in this document. Copyright by Volkswagen AG.

Downloaded from www.Manualslib.com manuals search engine

00 – Technical data

1 Gearbox identification

The 6-speed manual gearbox 02Q is installed in the Jetta 2005 ►, in the Golf Variant 2007 ►, in the Golf Variant 2010 ► and in the Jetta 2011 ► in conjunction with a 4-cylinder engine.

Allocation ⇒ page 1

1.1 Location on gearbox

Code letters and date of manufacture -arrow 1- manual gearbox 02Q -arrow 2-

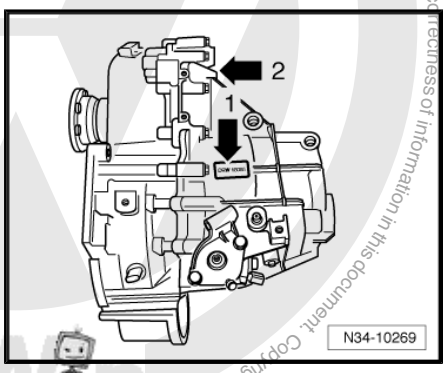

Manual gearbox 02Q -arrow 2-

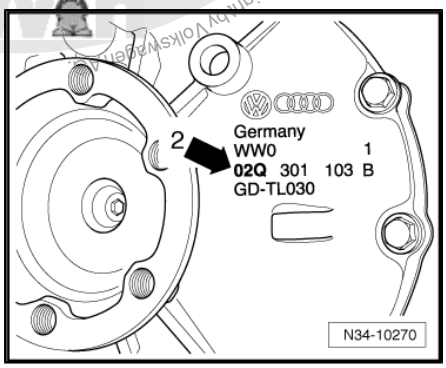

Identification code and date of gearbox manufacture -arrow-

Example:	GRF	25	11	3
	I	I	I	I
	I	I	I	I
	Identification code	Day	Month	Year (2003) of manufacture

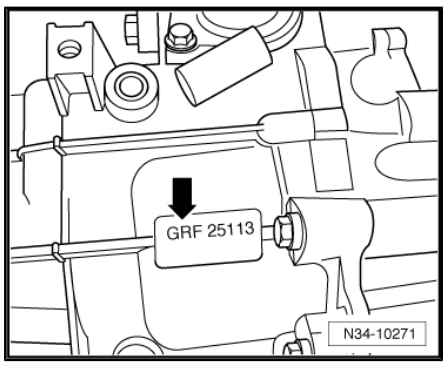

Additional data provide information about the production facility.

Note

The gearbox code also appears on the vehicle identification plates.

1.2 Identification code, assembly allocation and capacities

Manual gearbox		6-speed 02Q		
Identification code		**GRF**	**GVT**	**GXC**
Manufactured	from to	05.05 11.05	05.05 11.05	07.06 07.06

Downloaded from www.Manualslib.com manuals search engine

Manual gearbox		6-speed 02Q		
Identification code		**GRF**	**GVT**	**GXC**
Allocation	Model	Jetta 2005 ► Golf Variant 2007 ►	Jetta 2005 ► Golf Variant 2007 ►	Jetta 2005 ► Golf Variant 2007 ►
	Engine	2.0 l - 103 kW turbo diesel	2.0 l - 147 kW turbo FSI	2.0 l - 125 kW turbo diesel
Ratio: $Z_2 : Z_1$	Final drive I[1)]	69 : 20 = 3.450	71 : 18 = 3.944	71 : 18 = 3.944
	Final drive II[2)]	69 : 25 = 2.760	71 : 23 = 3.087	71 : 23 = 3.087
Capacity of manual gearbox		2.3 l	2.3 l	2.3 l
Drive shaft flange ∅		107 mm	107 mm	107 mm

[1)] Final drive for 1st to 4th gears
[2)] Final drive for 5th and 6th gears and reverse gear
- The following data can be found in the ⇒ Electronic parts catalogue „ETKA“ .

◆ Individual gear ratios

◆ Specification for gear oil

◆ Allocation of clutch plate and pressure plate

Manual gearbox		6-speed 02Q		
Identification code		**HDV**	**HVS**	**KNQ**
Manufactured	from to	05.05	07.06	02.08 11.08
Allocation	Model	Jetta 2005 ► Golf Variant 2007 ►	Jetta 2005 ► Golf Variant 2007 ►	Golf Variant 2007 ►
	Engine	2.0 l - 96 kW turbo diesel 2.0 l - 100 kW turbo diesel 2.0 l - 103 kW turbo diesel	2.0 l - 125 kW turbo diesel	1.9 l - 77 kW turbo diesel 1.6 l - 77 kW turbo diesel
Ratio: $Z_2 : Z_1$	Final drive I[1)]	69 : 20 = 3.450	70 : 19 = 3.684	72 : 17 = 4.235
	Final drive II[2)]	69 : 25 = 2.760	70 : 24 = 2.917	72 : 22 = 3.273
Capacity of manual gearbox		2.3 l	2.3 l	2.3 l
Drive shaft flange ∅		107 mm	107 mm	107 mm

[1)] Final drive for 1st to 4th gears
[2)] Final drive for 5th and 6th gears and reverse gear
- The following data can be found in the ⇒ Electronic parts catalogue „ETKA“ .

◆ Individual gear ratios

◆ Specification for gear oil

◆ Allocation of clutch plate and pressure plate

Manual gearbox		6-speed 02Q		
Identification code		**KNS**	**KNU**	**KNY**
Manufactured	from to	11.07 10.08	11.07 02.09	02.08 10.08
Allocation	Model	Jetta 2005 ► Golf Variant 2007 ► Golf Variant 2010 ►	Jetta 2005 ► Golf Variant 2007 ►	Jetta 2005 ►

Protected by copyright. Copying for private or commercial purposes, in part or in whole, is not permitted unless authorised by Volkswagen AG. Volkswagen AG does not guarantee or accept any liability with respect to the correctness of information in this document.

Downloaded from www.Manualslib.com manuals search engine

Manual gearbox		6-speed 02Q		
Identification code		**KNS**	**KNU**	**KNY**
	Engine	2.0 l - 100 kW turbo diesel 2.0 l - 103 kW turbo diesel	2.0 l - 147 kW 2.0 l - 155 kW	2.0 l - 125 kW turbo diesel
Ratio: $Z_2 : Z_1$	Final drive I[1)]	69 : 20 = 3.450	71 : 18 = 3.944	70 : 19 = 3.684
	Final drive II[2)]	69 : 25 = 2.760	71 : 23 = 3.087	70 : 24 = 2.917
Capacity of manual gearbox		2.3 l	2.3 l	2.3 l
Drive shaft flange ∅		107 mm	107 mm	107 mm

[1)] Final drive for 1st to 4th gears
[2)] Final drive for 5th and 6th gears and reverse gear
- The following data can be found in the ⇒ Electronic parts catalogue „ETKA“ .
  - ♦ Individual gear ratios
  - ♦ Specification for gear oil
  - ♦ Allocation of clutch plate and pressure plate

Manual gearbox		6-speed 02Q		
Identification code		**KRM**	**KXZ**	**KZS**
Manufactured	from to	05.07 07.10	05.09	05.09
Allocation	Model	Jetta 2005 ► Golf Variant 2010 ►	Jetta 2005 ► Golf Variant 2007 ►	Jetta 2005 ► Golf Variant 2007 ► Jetta 2011 ►
	Engine	2.0 l - 103 kW turbo diesel	2.0 l - 125 kW turbo diesel	2.0 l - 155 kW 2.0 l - 147 kW
Ratio: $Z_2 : Z_1$	Final drive I[1)]	69 : 20 = 3.450	70 : 19 = 3.684	70 : 19 = 3.684
	Final drive II[2)]	69 : 25 = 2.760	70 : 24 = 2.917	70 : 24 = 2.917
Capacity of manual gearbox		2.3 l	2.3 l	2.3 l
Drive shaft flange ∅		107 mm	107 mm	107 mm

[1)] Final drive for 1st to 4th gears
[2)] Final drive for 5th and 6th gears and reverse gear
- The following data can be found in the ⇒ Electronic parts catalogue „ETKA“ .
  - ♦ Individual gear ratios
  - ♦ Specification for gear oil
  - ♦ Allocation of clutch plate and pressure plate

Manual gearbox		6-speed 02Q		
Identification code		**LHD**	**LNN**	**NFN**
Manufactured	from to	10.08	06.09	05.09
Allocation	Model	Jetta 2005 ► Golf Variant 2007 ► Golf Variant 2010 ► Jetta 2011 ►	Golf Variant 2010 ►	Jetta 2005 ►
	Engine	2.0 l - 100 kW turbo diesel	1.6 l - 77 kW turbo diesel	2.0 l - 125 kW turbo diesel
Ratio: $Z_2 : Z_1$	Final drive I[1)]	69 : 20 = 3.450	72 : 17 = 4.235	70 : 19 = 3.684

Downloaded from www.Manualslib.com manuals search engine

Manual gearbox		6-speed 02Q		
Identification code		**LHD**	**LNN**	**NFN**
	Final drive II[2)]	69 : 25 = 2.760	72 : 22 = 3.273	70 : 24 = 2.917
Capacity of manual gearbox		2.3 l	2.3 l	2.3 l
Drive shaft flange ∅		107 mm	107 mm	107 mm

1) Final drive for 1st to 4th gears
2) Final drive for 5th and 6th gears and reverse gear

- The following data can be found in the ⇒ Electronic parts catalogue „ETKA“ .

- ♦ Individual gear ratios
- ♦ Specification for gear oil
- ♦ Allocation of clutch plate and pressure plate

Manual gearbox		6-speed 02Q		
Identification code		**NFP**	**MDL**	
Manufactured	from to	05.10	11.09	
Allocation	Model	Golf Variant 2010 ►	Jetta 2011 ►	
	Engine	2.0 l - 103 kW turbo diesel	2.0 l - 155 kW	
Ratio: $Z_2 : Z_1$	Final drive I[1)]	69 : 20 = 3.450	70 : 19 = 3.684	
	Final drive II[2)]	69 : 25 = 2.760	70 : 24 = 2.917	
Capacity of manual gearbox		2.3 l	2.3 l	
Drive shaft flange ∅		107 mm	107 mm	

1) Final drive for 1st to 4th gears
2) Final drive for 5th and 6th gears and reverse gear

- The following data can be found in the ⇒ Electronic parts catalogue „ETKA“ .

- ♦ Individual gear ratios
- ♦ Specification for gear oil
- ♦ Allocation of clutch plate and pressure plate

Protected by copyright. Copying for private or commercial purposes, in part or in whole, is not permitted unless authorised by Volkswagen AG. Volkswagen AG does not guarantee or accept any liability with respect to the correctness of information in this document. Copyright by Volkswagen AG.

Downloaded from www.Manualslib.com manuals search engine

2 Overview - power transmission

Designation

-Arrows- indicate direction of travel.

1 - Engine

2 - Clutch

3 - Manual gearbox

4 - Input shaft

5 - Output shaft for 5th, 6th and reverse gears

6 - Output shaft for 1st through 4th gears

7 - Differential

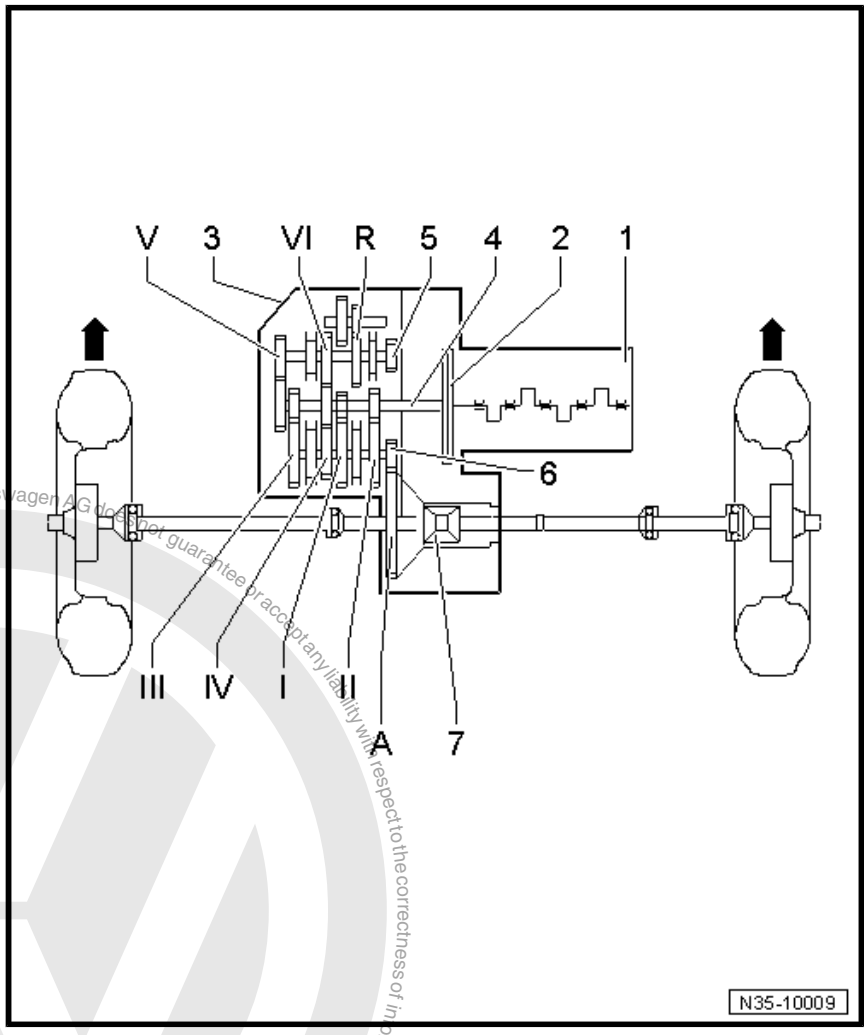

Gears

-Arrows- indicate direction of travel.

Protected by copyright. Copying for private or commercial purposes, in part or in whole, is not permitted unless authorised by Volkswagen AG. Volkswagen AG does not guarantee or accept any liability with respect to the correctness of information in this document. Copyright by Volkswagen AG.

Downloaded from www.Manualslib.com manuals search engine

I - 1st gear

II - 2nd gear

III - 3rd gear

IV - 4th gear

V - 5th gear

VI - 6th gear

R - Reverse gear

A - Final drive

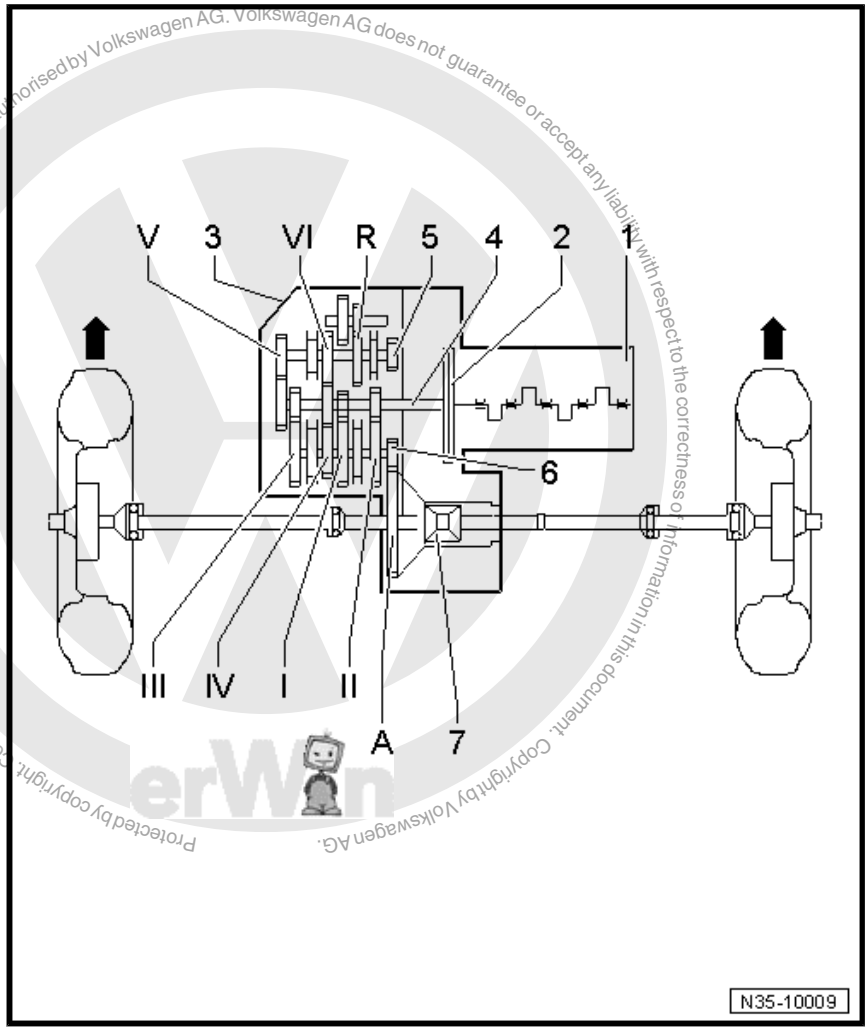

Protected by copyright. Copying for private or commercial purposes, in part or in whole, is not permitted unless authorised by Volkswagen AG. Volkswagen AG does not guarantee or accept any liability with respect to the correctness of information in this document. Copyright by Volkswagen AG.

Downloaded from www.Manualslib.com manuals search engine

3 Calculating overall gear ratio „i“

Example:

	6th gear	Final drive
Drive gear	$ZG_1 = 43$	$ZA_1 = 25$
Driven gear	$ZG_2 = 35$	$ZA_2 = 69$

$i = ZG_2 : ZG_1$ [1)]

i_G = Gear ratio = $ZG_2 : ZG_1 = 35 : 43 = 0.814$

i_A = Final drive ratio = $ZG_2 : ZG_1 = 69 : 25 = 2.760$

i_{total} = Overall ratio = $i_G \times i_A = 0.814 \times 2.760 = 2.247$

1) Z_1 = No. of teeth on driving gear, Z_2 = No. of teeth on driven gear

Protected by copyright. Copying for private or commercial purposes, in part or in whole, is not permitted unless authorised by Volkswagen AG. Volkswagen AG does not guarantee or accept any liability with respect to the correctness of information in this document. Copyright by Volkswagen AG.

Downloaded from www.Manualslib.com manuals search engine

4 General repair notes

To ensure flawless and successful gearbox repairs, the greatest care and cleanliness as well as the use of good and proper tools are essential. Of course, the basic rules for safety also apply during repair work.

A number of instructions generally applicable to the various repair procedures - which were previously repeated a number of times at various places in the workshop manual are summarised under the topic „components“ ⇒ page 8 . They apply to this workshop manual.

4.1 Contact corrosion!

- The gearbox housing and clutch housing are made of a magnesium alloy.
- Bolts and other components in direct contact with the gearbox have a surface matched to it.
- If the incorrect components (bolts, nuts, washers and so on) are used, contact corrosion will develop. The gearbox housing and clutch housing will be damaged.
- Always install parts listed in the ⇒ Electronic parts catalogue „ETKA“ .

4.2 Special tools

For a complete list of special tools used in this workshop manual, see ⇒ Workshop equipment and special tools .

4.3 Components

4.3.1 Gearbox

- When installing the manual gearbox, ensure that the dowel sleeves between the engine and gearbox are correctly seated.
- When installing mounting brackets or waxed components, clean the contact surfaces. Contact surfaces must be free of wax and grease.
- Allocate bolts and other components using ⇒ Electronic parts catalogue „ETKA“.
- Following installation, check gear oil level ⇒ page 126 .
- Capacity ⇒ page 1 .

Protected by copyright. Copying for private or commercial purposes, in part or in whole, is not permitted unless authorised by Volkswagen AG. Volkswagen AG does not guarantee or accept any liability with respect to the correctness of information in this document. Copyright by Volkswagen AG.

Downloaded from www.Manualslib.com manuals search engine

4.3.2 O-rings, seals, gaskets and sealants

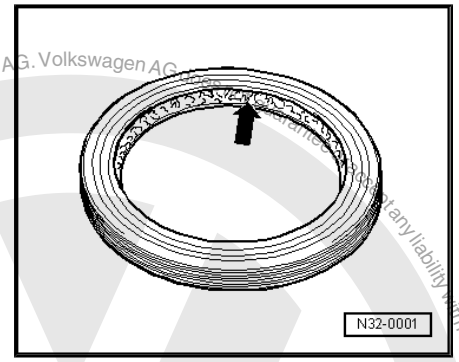

- Thoroughly clean housing joint surfaces before applying sealant .
- Apply sealant -AMV 188 200 03- uniformly but not too thick.
- Always renew O-rings, seals and gaskets.
- When seals have been removed, check contact surface on housings or shafts for burrs and damage and rectify as necessary.
- Before installing radial shaft seals, lightly oil outer diameter and half-fill space between sealing lips -arrow- with sealing grease -G 052 128 A1- .
- The open side of the oil seal faces the side with fluid filling.
- Press in new oil seals so that sealing lip does not contact the shaft in the same place as the old seal (make use of insertion depth tolerances).
- Lightly oil O-rings before installing; this prevents the rings being crushed when inserted.
- After renewing seals and gaskets, check oil level in gearbox and replenish if necessary ⇒ page 126 .

4.3.3 Locking devices

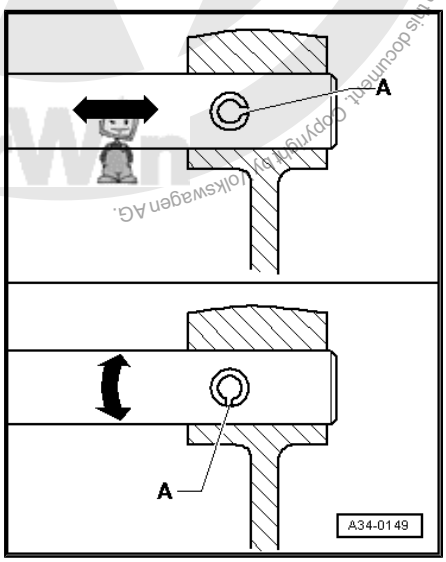

- Do not overstretch retaining rings.
- Always renew retaining rings which have been damaged or overstretched.
- Retaining rings must locate properly in grooves.
- Renew spring pins. Installation position: slit -A- should be in line with the line of force -arrow-.

Protected by copyright. Copying for private or commercial purposes, in part or in whole, is not permitted unless authorised by Volkswagen AG. Volkswagen AG does not guarantee or assume any liability with respect to the correctness of information in this document. Copyright by Volkswagen AG.

Downloaded from www.Manualslib.com manuals search engine

4.3.4 Nuts and bolts

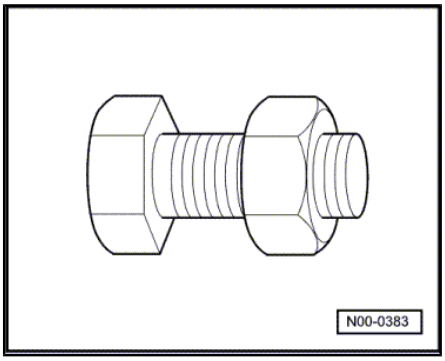

- Loosen and tighten securing bolts and nuts for covers and housings diagonally.
- Do not cant especially delicate parts, such as clutch pressure plates. Loosen and tighten bolts and nuts in stages in a diagonal sequence.
- Torque settings are specified for unoiled bolts and nuts.
- Always renew self-locking bolts and nuts.
- Ensure with threaded connections that contact surfaces as well as nuts and bolts are rewaxed only after assembly, if necessary.
- Threads of bolts secured with locking fluid must be cleaned with a wire brush. Then insert bolts with locking fluid - AMV 185 101 A1- .
- Clean threaded holes in which self-locking bolts or bolts with locking fluid have been inserted, e.g. with a thread chaser. Otherwise there is a danger that the bolts may shear when removed again.

4.3.5 Bearings

- Install needle bearings with lettered side (thicker metal) towards fitting tool.
- Lubricate all gearbox bearings with gear oil before installing.
- Tapered roller bearings fitted to one shaft must be renewed as a set. Use same make of bearings.
- Heat inner races to about 100° C with the inductive heater - VAS 6414- before installing.
- Do not interchange outer or inner races of bearings of the same size. The bearings are matched in pairs.

4.3.6 Shims

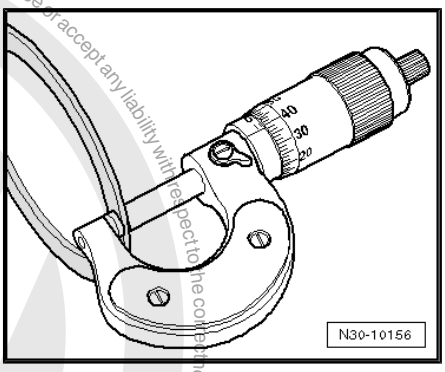

- Measure shims at several points with a micrometer. The various thicknesses make it possible to achieve the exact shim thickness required.
- Check for burrs and damage.
- Install only flawless shims.

Protected by copyright. Copying for private or commercial purposes, in part or in whole, not permitted unless authorised by Volkswagen AG. Volkswagen AG does not guarantee or accept any liability with respect to the correctness of information in this document. Copyright by Volkswagen AG.

Downloaded from www.Manualslib.com manuals search engine

4.3.7 Synchro-rings

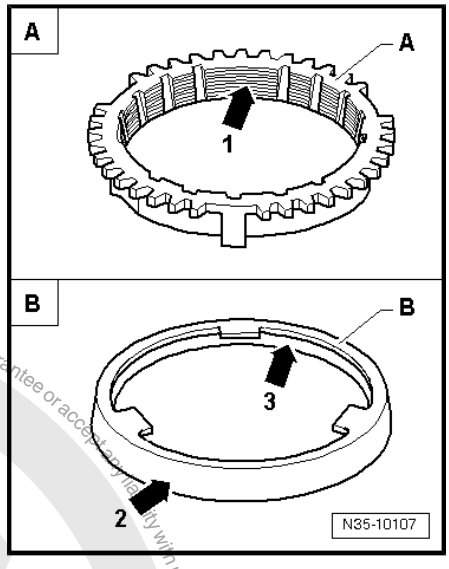

- Do not interchange. When reusing synchro-rings, always fit to the same gear.
- Check for wear and renew if necessary.
- Check grooves -arrow 1- of synchro-ring -A- and inner ring for flat spots (worn grooves).
- If synchro-rings are coated, coating must not be damaged.
- If an intermediate ring -B- is installed, check the outer friction surface -arrow 2- and inner friction surface -arrow 3- of this intermediate ring for »scoring« and »signs of abnormal wear«.
- Check cone of synchromeshed gear for »scoring« and »signs of abnormal wear«.
- Moisten synchromesh mechanism with gear oil before installing.

4.3.8 Gears, synchro-hubs, inner races for synchromeshed gears

- Heat inner races for synchromeshed gear to about 100° C with the inductive heater -VAS 6414- before installing.
- Heat synchro-hub with inductive heater -VAS 6414- to approx. 100 °C before installing. Press in to stop when installing so there is no axial clearance.
- Heat gears with inductive heater -VAS 6414- to approx. 100 ° C before installing. Press in to stop when installing so there is no axial clearance.
- Observe installation position.

4.3.9 Synchromeshed gears

- After assembly, check synchromeshed gears for slight play, or for freedom of movement.

4.3.10 Clutch

- Ensure that the pressure plate does not cant: loosen and tighten bolts diagonally and in several gradual stages.
- If the clutch has burnt out, thoroughly clean the clutch housing as well as the friction surface of flywheel with a cloth to reduce the smell of burnt linings.

Protected by copyright. Copying for private or commercial purposes, in part or in whole, is not permitted unless authorised by Volkswagen AG. Volkswagen AG does not guarantee or accept any liability with respect to the correctness of information in this document. Copyright by Volkswagen AG.

Downloaded from www.Manualslib.com manuals search engine

30 – Clutch

1 Fault finding, power transmission

– Refer to ⇒ Fault finding, power transmission; Rep. gr. 30 ; Complaints about clutch and clutch mechanism and ⇒ Fault finding, power transmission; Rep. gr. 34 ; Complaints about selector mechanism

Protected by copyright. Copying for private or commercial purposes, in part or in whole, is not permitted unless authorised by Volkswagen AG. Volkswagen AG does not guarantee or accept any liability with respect to the correctness of information in this document. Copyright by Volkswagen AG.

Downloaded from www.Manualslib.com manuals search engine

2 Repairing clutch mechanism

2.1 Overview

Note

- *Before disconnecting battery, obtain code for radio units having anti-theft coding.*
- *With ignition switched off, disconnect battery ⇒ Electrical system; Rep. gr. 27 ; Disconnecting and connecting battery .*
- *When reconnecting battery, refer to ⇒ Electrical system; Rep. gr. 27 ; Disconnecting and connecting battery .*
- *Lubricate all bearings and contact surfaces with grease -G 000 450 02- .*

I - Assembly overview - pedal cluster ⇒ page 14

II - Assembly overview - hydraulics (LHD) ⇒ page 34

III - Assembly overview - hydraulics (RHD) ⇒ page 36

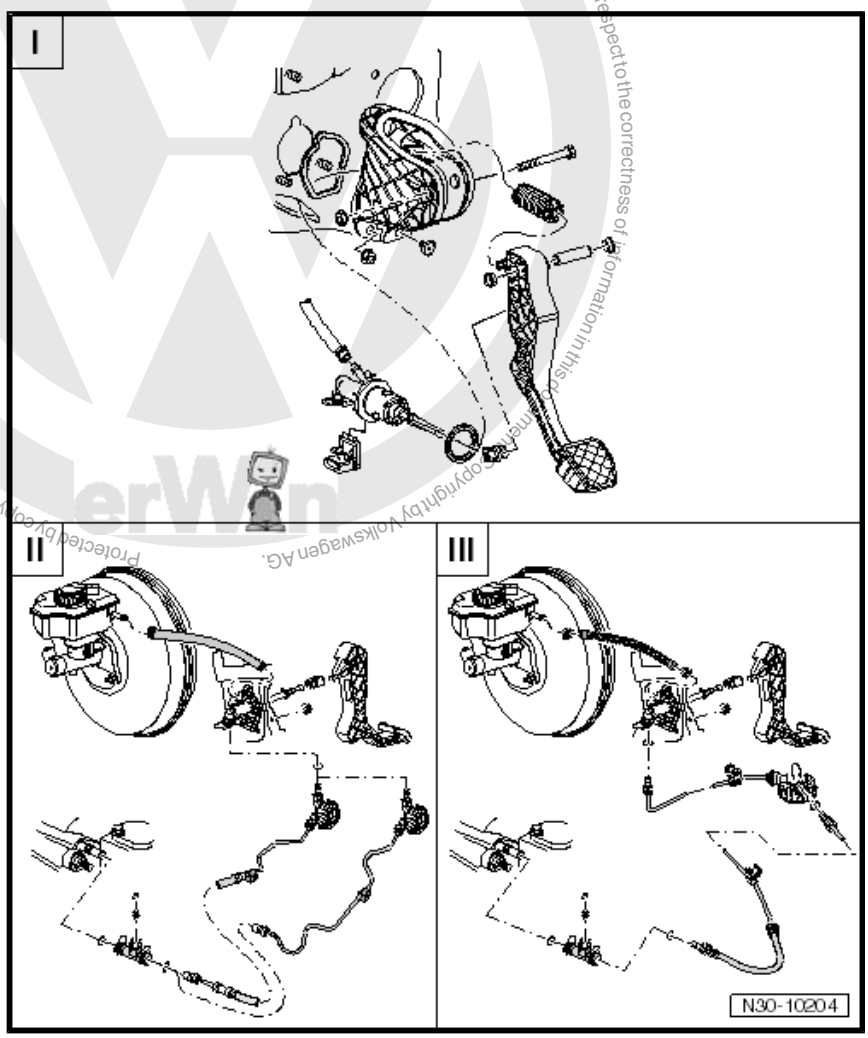

Protected by copyright. Copying for private or commercial purposes, in part or in whole, is not permitted unless authorised by Volkswagen AG. Volkswagen AG does not guarantee or accept any liability with respect to the correctness of information in this document. Copyright by Volkswagen AG.

Downloaded from www.Manualslib.com manuals search engine

2.2 Assembly overview - pedal cluster

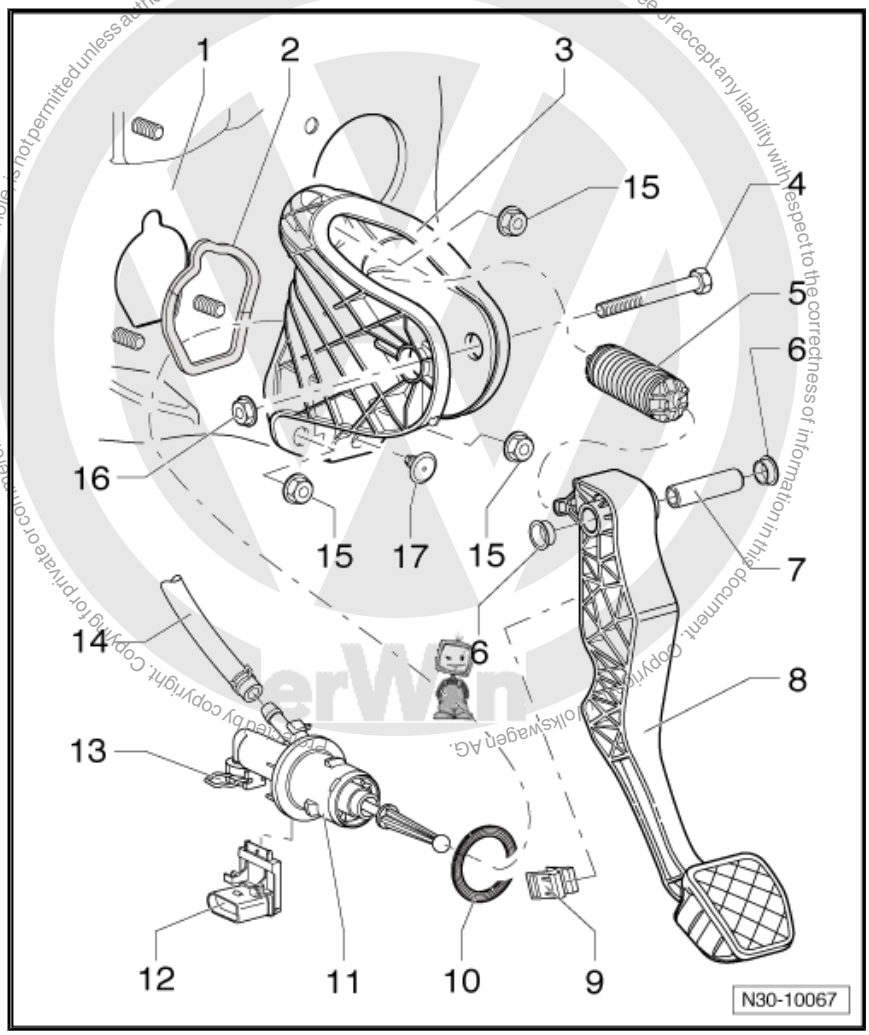

1 - Bulkhead
- ❑ With support for mounting bracket

2 - Seal
- ❑ Always renew
- ❑ Between mounting bracket and bulkhead
- ❑ Self-adhesive
- ❑ Bond to mounting bracket

3 - Mounting bracket
- ❑ For mounting clutch pedal
- ❑ Is provided with damping in some equipment variants ⇒ page 15
- ❑ Removing and installing ⇒ page 23

4 - Bolt

5 - Over-centre spring
- ❑ Removing and installing ⇒ page 15

6 - Bearing bush

7 - Pivot pin

8 - Clutch pedal
- ❑ Removing and installing ⇒ page 19

9 - Retainer
- ❑ To remove and install, separate master cylinder from clutch pedal ⇒ page 19

10 - Seal
- ❑ Always renew
- ❑ Between master cylinder and mounting bracket

11 - Master cylinder
- ❑ Removing and installing after removal of mounting bracket ⇒ page 29

12 - Clutch position sender -G476-
- ❑ Removing and installing ⇒ page 30
- ❑ Can be checked using „guided fault finding“ of vehicle diagnostic tester
- ❑ The clutch position sender -G476- is identified as clutch pedal switch -F36- in „guided fault finding“

13 - Clip
- ❑ Pull out clip to stop to remove and install pipe/hose line

14 - Supply hose
- ❑ Rubber
- ❑ From 12.05, plastic ⇒ page 35

15 - Hexagon nut, 25 Nm
- ❑ Self-locking

Downloaded from www.Manualslib.com manuals search engine

- ❑ Qty. 3
- ❑ For mounting bracket on bulkhead
- ❑ Always renew

16 - Hexagon nut, 25 Nm

- ❑ Always renew

17 - Stop

- ❑ For clutch pedal

Mounting bracket with damping -arrows-

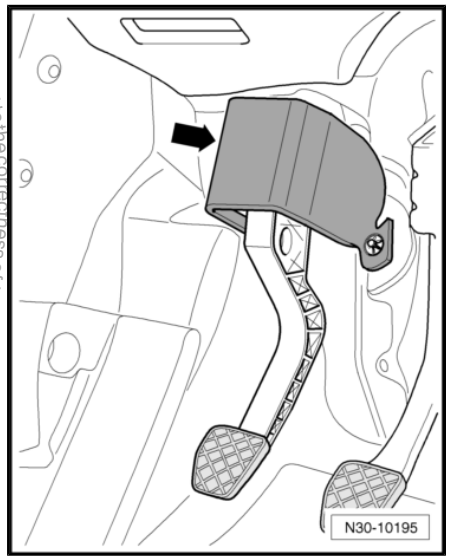

Copyright by Volkswagen AG. Volkswagen AG does not guarantee or accept any liability with respect to the correctness of information in this document. Copyright by Volkswagen AG. Copying for private or commercial purposes, in part or in whole, is not permitted unless authorised by Volkswagen AG.

2.3 Removing and installing over-centre spring

Special tools and workshop equipment required

- ♦ Release tool -T10178-

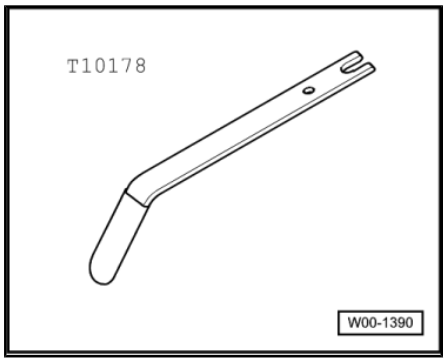

2.3.1 Removing

Vehicles with knee airbag

Note

The installation location of the knee airbag is above the pedal cluster.

– First check whether a coded radio is fitted. If so, obtain anti-theft code.

Downloaded from www.Manualslib.com manuals search engine

– With ignition switched off, disconnect battery ⇒ Electrical system; Rep. gr. 27 ; Disconnecting and connecting battery .

Continuation for all

– Push driver seat as far back as possible and put steering wheel in highest position.

– Remove driver side footwell cover and driver side left trim panel ⇒ General body repairs, interior; Rep. gr. 68 ; Compartments, covers and trim panels .

Vehicles with knee airbag

– Remove bracket for knee airbag together with crash bar ⇒ Interior equipment; Rep. gr. 69 ; Airbag; Removing and installing knee airbag bracket .

Vehicles without knee airbag

– Remove crash bar -1- from in front of clutch pedal by removing nuts -2-.

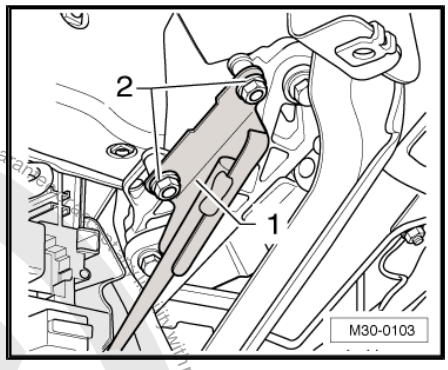

Continuation for all

– If fitted, remove damping -arrow- from lower area of clutch pedal mounting bracket.

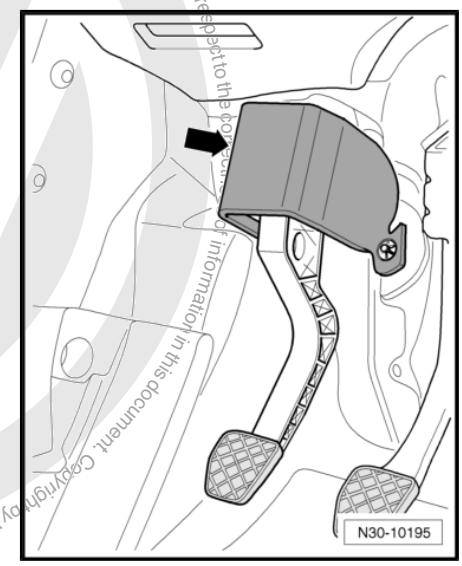

– To do this, remove lock washers -A- for damping.

– Pull off damping.

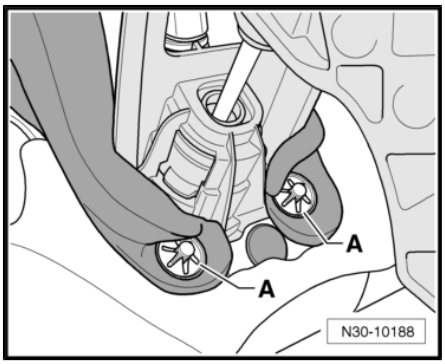

Protected by copyright. Copying for private or commercial purposes, in part or in whole, is not permitted unless authorised by Volkswagen AG. Volkswagen AG does not guarantee or assume any liability with respect to the correctness of information in this document. Copyright by Volkswagen AG.

Downloaded from www.Manualslib.com manuals search engine

Protected by copyright. Copying for private or commercial purposes, in part or in whole, is not permitted unless authorised by Volkswagen AG. Volkswagen AG does not guarantee or accept any liability with respect to the correctness of information in this document. Copyright by Volkswagen AG.

Push damping upwards in area of upper securing nut -1- above clutch pedal -A- in -direction of arrow-.

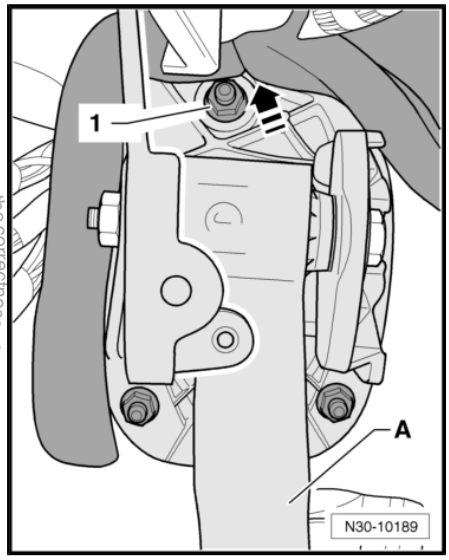

– Unbolt clutch pedal -1- from mounting bracket -3- by removing nut -2- and pulling out bolt -5-.

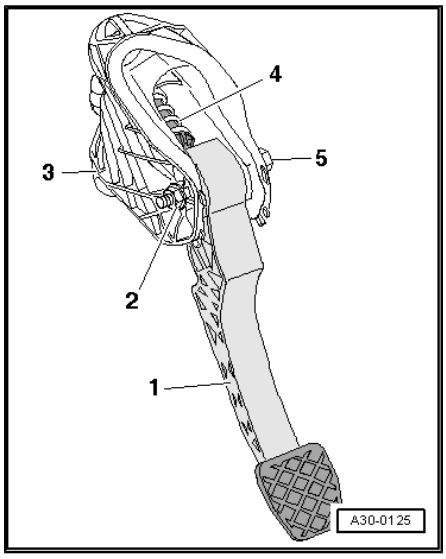

Note

The clutch pedal remains hooked to operating rod of master cylinder.

– Swing clutch pedal down slightly and remove over-centre spring -4- from mounting bracket.

2.3.2 Installing

Install in the reverse order of removal, observing the following:

Note

Renew self-locking nuts.

Downloaded from www.Manualslib.com manuals search engine

– Insert over-centre spring -2- in mounting bracket from above while holding end of spring with assembly tool -T10178- in installation position.

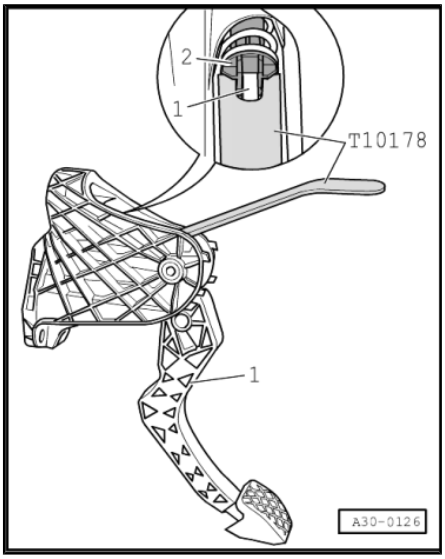

- Receptacle -arrow- for tip -A- of clutch pedal must stand vertically.

– Insert tip -A- of clutch pedal in bearing recess of over-centre spring.

– Depress clutch pedal slightly, push bolt through and tighten self-locking nut to specified torque ⇒ page 19 .

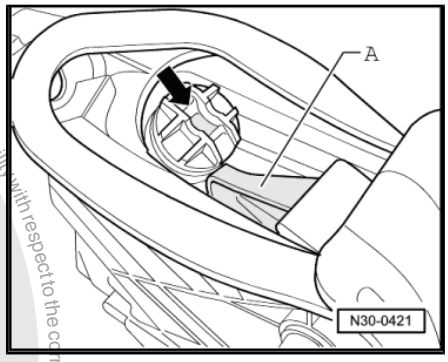

Some cars have damping -arrow- on the clutch pedal mounting bracket.

– Return it to installation position.

Vehicles without knee airbag

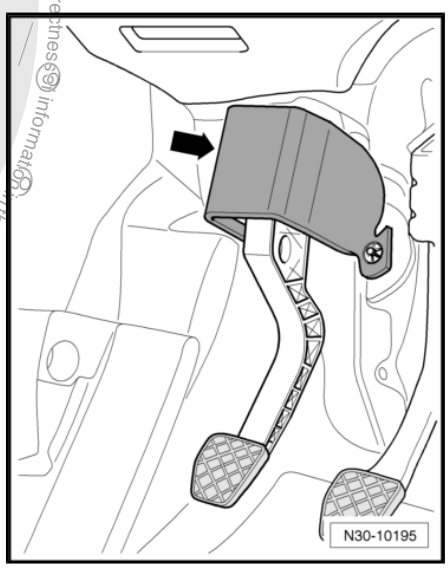

Protected by copyright. Copyright for private or commercial purposes, in part or in whole, is not permitted unless authorised by Volkswagen AG. Volkswagen AG does not guarantee or accept any liability with respect to the correctness of information in this document. Copyright by Volkswagen AG.

Downloaded from www.Manualslib.com manuals search engine

– Install crash bar -1- in front of clutch pedal by screwing on and tightening nuts -2-.

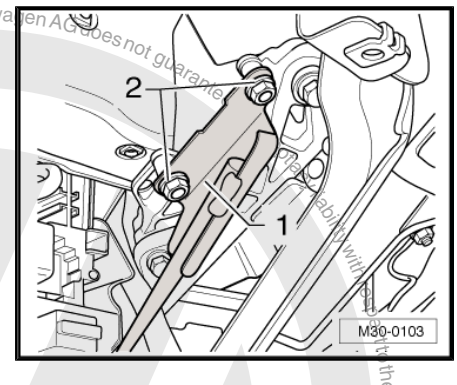

Vehicles with knee airbag

– Install bracket for knee airbag together with crash bar ⇒ Interior equipment; Rep. gr. 69 ; Airbag; Removing and installing knee airbag bracket .

Continuation for all

– Install driver side footwell cover and driver side left trim panel ⇒ General body repairs, interior; Rep. gr. 68 ; Compartments, covers and trim panels .

– If disconnected, connect battery ⇒ Electrical system; Rep. gr. 27 ; Removing and installing battery .

2.3.3 Specified torques

Component	Nm
Clutch pedal to mounting bracket ♦ Renew self-locking nuts	25
Crash bar to steering column mounting bracket	10

2.4 Removing and installing clutch pedal

Special tools and workshop equipment required

♦ Pliers -T10005-

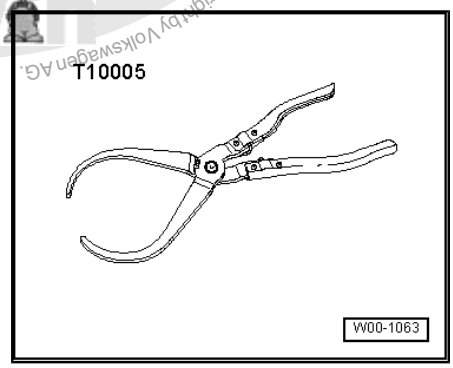

♦ Release tool -T10178-

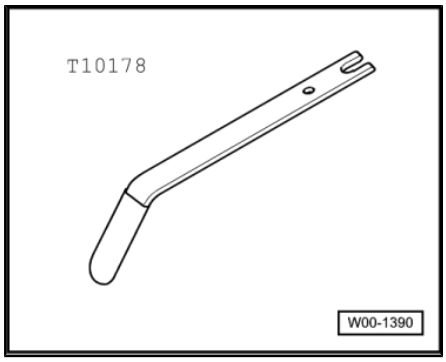

Protected by copyright. Copyright by Volkswagen AG. Volkswagen AG does not guarantee the correctness of information in this document. Copying for private or commercial purposes, in part or in whole, is not permitted unless authorised by Volkswagen AG. Volkswagen AG does not guarantee the correctness of information in this document. Copyright by Volkswagen AG.

Downloaded from www.Manualslib.com manuals search engine

2.4.1 Removing

Vehicles with knee airbag

Note

The installation location of the knee airbag is above the pedal cluster.

– First check whether a coded radio is fitted. If so, obtain anti-theft code.

– With ignition switched off, disconnect battery earth strap ⇒ Electrical system; Rep. gr. 27 ; Disconnecting and connecting battery .

Continuation for all

– Push driver seat as far back as possible and put steering wheel in highest position.

– Remove driver side footwell cover and driver side left trim panel ⇒ General body repairs, interior; Rep. gr. 68 ; Compartments, covers and trim panels .

Vehicles with knee airbag

– Remove bracket for knee airbag together with crash bar ⇒ Interior equipment; Rep. gr. 69 ; Airbag; Removing and installing knee airbag bracket .

Vehicles without knee airbag

– Remove crash bar -1- from in front of clutch pedal by removing nuts -2-.

Continuation for all

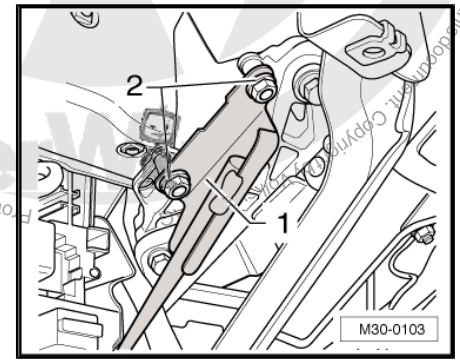

– If fitted, remove damping -arrow- from lower area of clutch pedal mounting bracket.

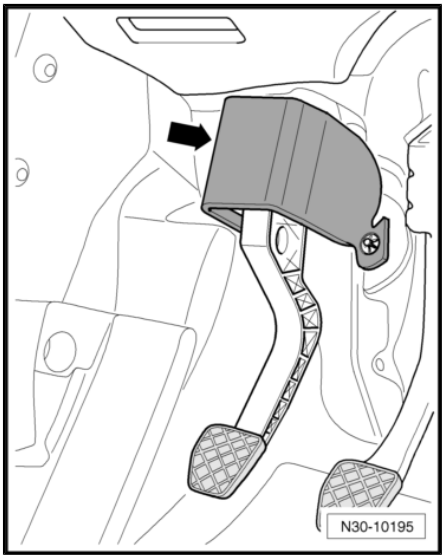

Protected by copyright. Copying for private or commercial purposes, in part or in whole, is not permitted unless authorised by Volkswagen AG. Volkswagen AG does not guarantee or accept any liability with respect to the correctness of information in this document. Copyright by Volkswagen AG.

Downloaded from www.Manualslib.com manuals search engine

Protected by copyright. Copying for private or commercial purposes, in part or in whole, is not permitted unless authorised by Volkswagen AG. Volkswagen AG does not guarantee or accept any liability with respect to the correctness of information in this document. Copyright by Volkswagen AG.

– To do this, remove lock washers -A- for damping.
– Pull off damping.

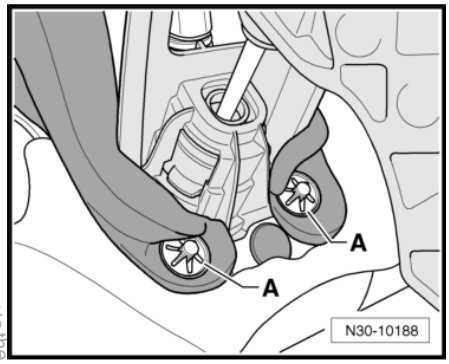

– Push damping upwards in area of upper securing nut -1- above clutch pedal -A- in -direction of arrow-.

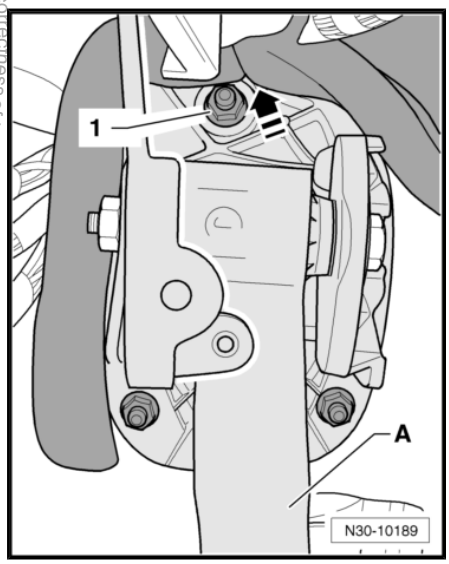

– Unbolt clutch pedal -1- from mounting bracket -3- by removing nut -2- and pulling out bolt -5-.
– Swing clutch pedal forward slightly and remove over-centre spring -4- from mounting bracket.

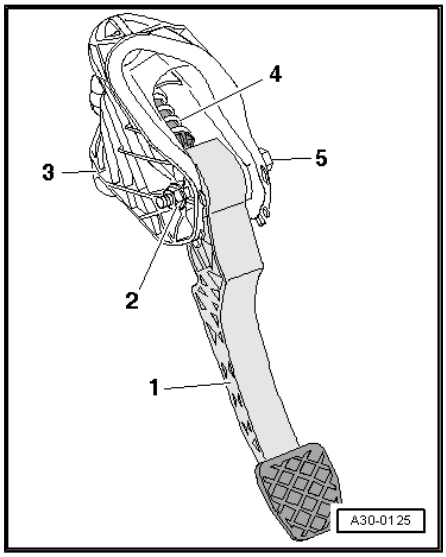

Downloaded from www.Manualslib.com manuals search engine

– Release clutch pedal from master cylinder with pliers - T10005- .
– Remove clutch pedal.

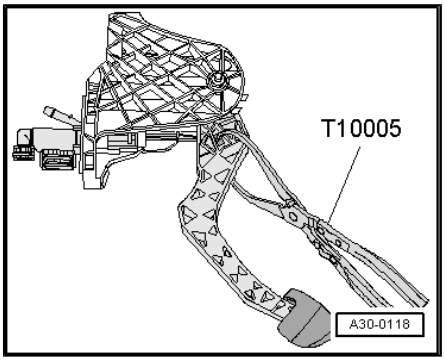

2.4.2 Installing

Install in the reverse order of removal, observing the following:

Note

Renew self-locking nuts.

– Attach retainer -2- to master cylinder operating rod -1-.
– Press retainer into notch in clutch pedal -3- until it can be heard to engage.

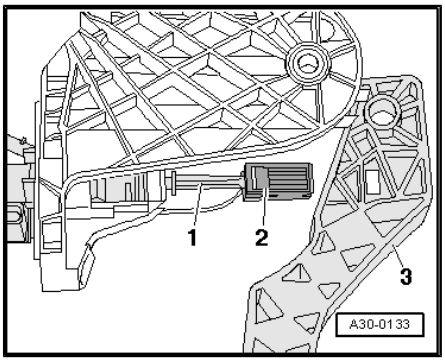

– Insert over-centre spring -2- in mounting bracket from above while holding end of spring with assembly tool -T10178- in installation position.

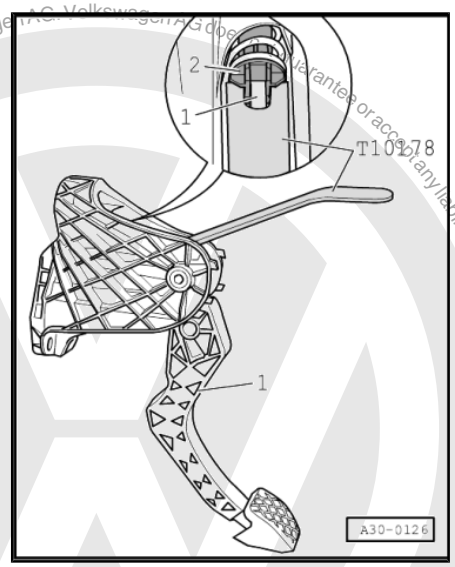

Protected by copyright. Copying for private or commercial purposes, in part or in whole, is not permitted unless authorised by Volkswagen AG. Volkswagen AG does not guarantee or accept any liability with respect to the correctness of information in this document. Copyright by Volkswagen AG.

Downloaded from www.Manualslib.com manuals search engine

- Receptacle -arrow- for tip -A- of clutch pedal must stand vertically.

– Insert tip -A- of clutch pedal in bearing recess of over-centre spring.

– Depress clutch pedal slightly, push bolt through and tighten self-locking nut to specified torque ⇒ page 23 .

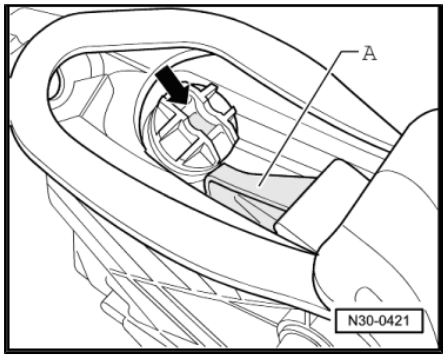

Some cars have damping -arrow- on the mounting bracket/clutch pedal.

– Return it to installation position.

Vehicles without knee airbag

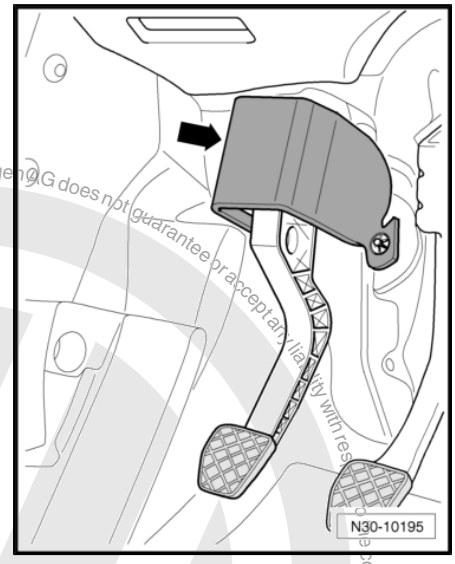

– Install crash bar -1- in front of clutch pedal by screwing on and tightening nuts -2-.

Vehicles with knee airbag

– Install bracket for knee airbag together with crash bar ⇒ Interior equipment; Rep. gr. 69 ; Airbag; Removing and installing knee airbag bracket .

Continuation for all

– Install driver side footwell cover and driver side left trim panel ⇒ General body repairs, interior; Rep. gr. 68 ; Compartments, covers and trim panels .

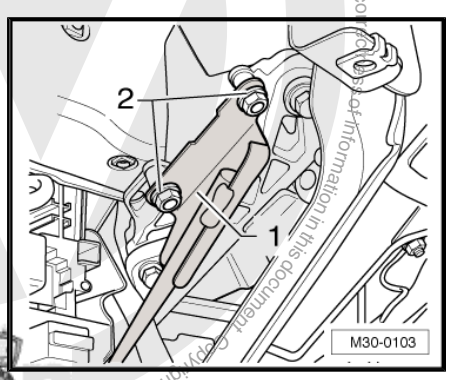

Protected by copyright. Copying for private or commercial purposes, in part or in whole, is not permitted unless authorised by Volkswagen AG. Volkswagen AG does not guarantee or accept any liability with respect to the correctness of information in this document. Copyright by Volkswagen AG.

2.4.3 Specified torques

Component	Nm
Clutch pedal to mounting bracket ♦ Renew self-locking nuts	25
Crash bar to steering column mounting bracket	10

2.5 Removing and installing mounting bracket

Special tools and workshop equipment required

Downloaded from www.Manualslib.com manuals search engine

- Hose clamps -3094-

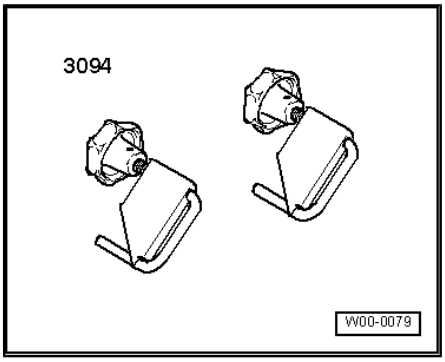

- Hose clip pliers -VAS 6362-

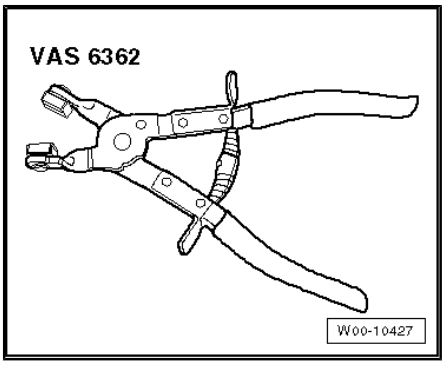

- Sealing tool -T10249-

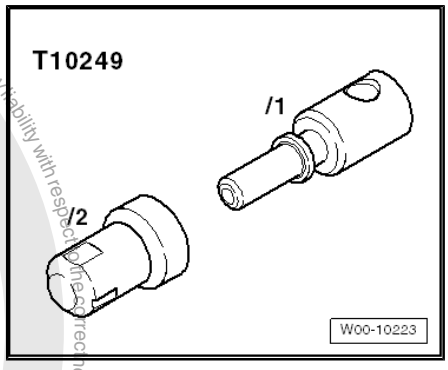

2.5.1 Removing

LHD

– First check whether a coded radio is fitted. If so, obtain anti-theft code.

– With ignition switched off, disconnect battery earth strap ⇒ Electrical system; Rep. gr. 27 ; Disconnecting and connecting battery .

– Remove complete air filter housing if it is near battery ⇒ Rep. gr. 23 ; Repairing diesel direct injection system or ⇒ Rep. gr. 24 ; Repairing injection system .

– Remove battery and battery tray ⇒ Electrical system; Rep. gr. 27 ; Battery; Removing and installing battery .

Protected by copyright. Copying for private or commercial purposes, in part or in whole, is not permitted unless authorised by Volkswagen AG. Volkswagen AG does not guarantee or accept any liability with respect to the correctness of information in this document. Copyright by Volkswagen AG.

Downloaded from www.Manualslib.com manuals search engine

Continuation for all

Note

- *During the following work, ensure that no brake fluid lands on longitudinal member or gearbox. If this does happen, clean the affected areas thoroughly.*
- *Place a lint-free cloth under the master cylinder.*

– Clamp off supply hose to master cylinder using hose clamp to 25 mm ∅ -3094- .

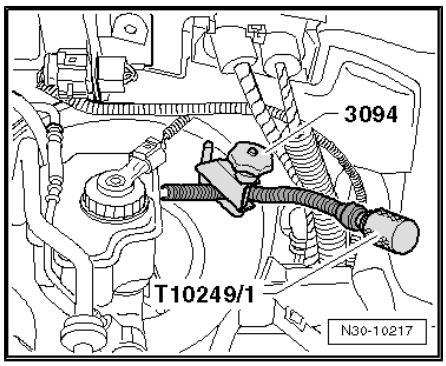

– If necessary, loosen spring-type clip -3- with hose clip pliers -VAS 6362- and pull supply hose off master cylinder.
– In addition, for disconnecting, you can close it with the sealing tool -T10249/1- (⇒ figure above).
– Release securing clip -2- using screwdriver or a pointed object and pull pipe/hose line or plastic line -1- off master cylinder.
– Unclip clutch position sender -G476- from master cylinder -arrow- and remove with electrical connector attached -4-.

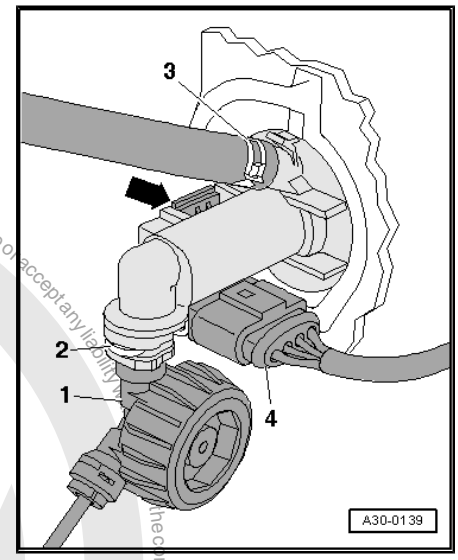

Note

When performing work in the footwell, put cloths on the carpet to protect it from possible brake fluid spills.

– Remove driver side footwell cover and driver side left trim panel ⇒ General body repairs, interior; Rep. gr. 68 ; Compartments, covers and trim panels .

Vehicles with knee airbag

– Remove bracket for knee airbag together with crash bar ⇒ Interior equipment; Rep. gr. 69 ; Airbag; Removing and installing knee airbag bracket .

Vehicles without knee airbag

Protected by copyright. Copying for private or commercial purposes, partially or in whole, is not permitted unless authorised by Volkswagen AG. Copyright by Volkswagen AG. We do not guarantee or accept any liability for the correctness of information in this document.

Downloaded from www.Manualslib.com manuals search engine

– Remove crash bar -1- from in front of clutch pedal by removing nuts -2-.

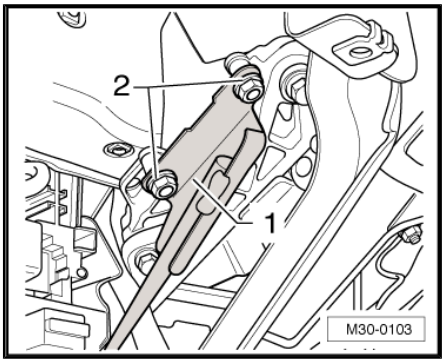

Continuation for all

– If fitted, remove damping -arrow- from lower area of clutch pedal mounting bracket.

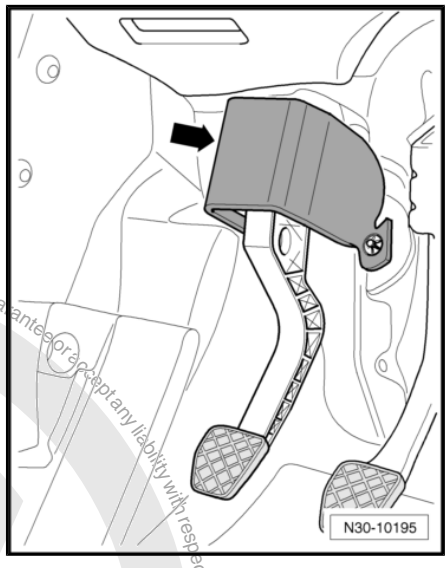

– To do this, remove lock washers -A- for damping.
– Pull off damping.

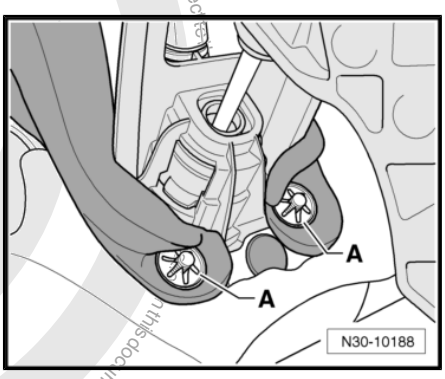

Protected by copyright. Copying for private or commercial purposes, in part or in whole, is not permitted unless authorised by Volkswagen AG. Volkswagen AG does not guarantee or accept any liability with respect to this document. Copyright by Volkswagen AG.

Downloaded from www.Manualslib.com manuals search engine

– Push damping upwards in area of upper securing nut -1- above clutch pedal -A- in -direction of arrow-.

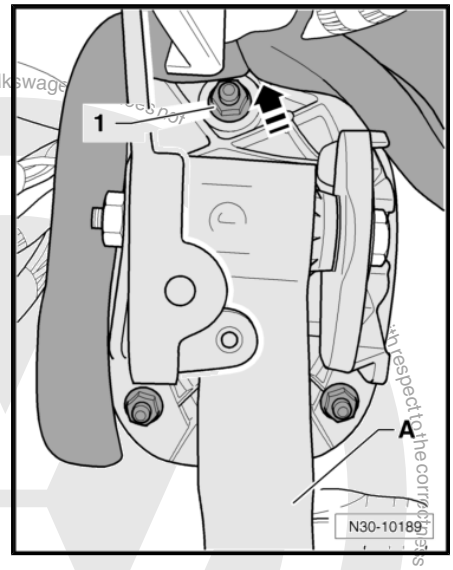

– Remove nuts -2-.
– Remove mounting bracket -1-.

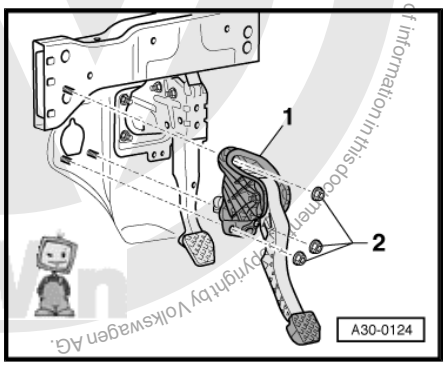

2.5.2 Installing

Install in the reverse order of removal, observing the following:

Note

- *Renew self-locking nuts.*
- *Renew hose clips.*
- *Allocate all components according to ⇒ Electronic parts catalogue „ETKA“.*

Protected by copyright. Copying for private or commercial purposes, in part or in whole, is not permitted unless authorised by Volkswagen AG. Volkswagen AG does not guarantee or accept any liability with respect to the correctness of information in this document. Copyright by Volkswagen AG.

Downloaded from www.Manualslib.com manuals search engine

Some cars have damping -arrow- on the clutch pedal mounting bracket.

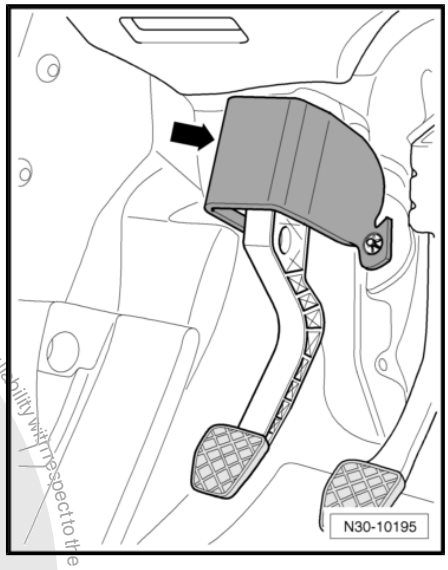

Vehicles without knee airbag

- Install crash bar -1- in front of clutch pedal by screwing on and tightening nuts -2-.

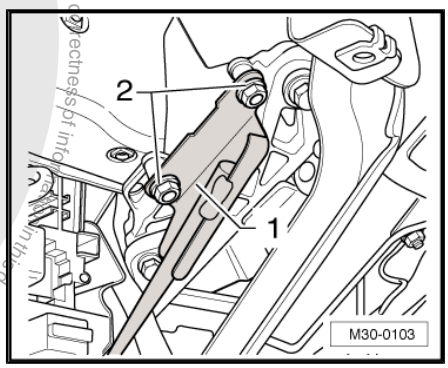

Vehicles with knee airbag

- Install bracket for knee airbag together with crash bar ⇒ Interior equipment; Rep. gr. 69 ; Airbag; Removing and installing knee airbag bracket .

Continuation for all

- Install driver side footwell cover and driver side left trim panel ⇒ General body repairs, interior; Rep. gr. 68 ; Compartments, covers and trim panels .
- Push pipe/hose line or plastic line -1- with seal -2- onto connection of master cylinder -4- until securing clip -3- engages audibly.
- Test line by tugging on it.
- After removing hose clamp up to 25 mm ∅ -3094- , return supply hose to its original shape, if necessary.
- Bleed clutch system ⇒ page 37 .

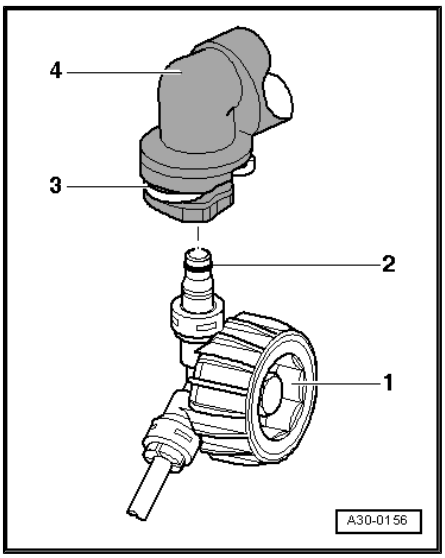

LHD

- Install battery tray and battery ⇒ Electrical system; Rep. gr. 27 ; Removing and installing battery .
- Remove complete air filter housing if it is near battery ⇒ Rep. gr. 23 ; Repairing diesel direct injection system or ⇒ Rep. gr. 24 ; Repairing injection system .
- Reconnect battery and perform work required after connecting battery ⇒ Electrical system; Rep. gr. 27 ; Disconnecting and connecting battery .

2.5.3 Specified torques

Component	Nm
Mounting bracket to body ♦ Renew self-locking nuts.	25
Crash bar to steering column mounting bracket	10

Downloaded from www.Manualslib.com manuals search engine

2.6 Removing and installing master cylinder

Special tools and workshop equipment required

♦ Pliers -T10005-

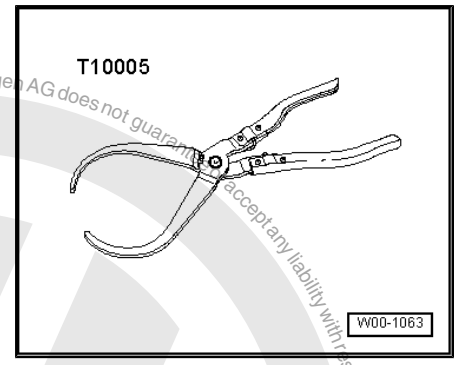

2.6.1 Removing

– Remove mounting bracket ⇒ page 23 .

– Release retainer for master cylinder operating rod using pliers -T10005- .

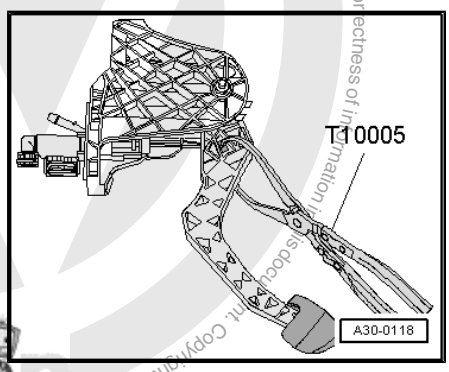

– Insert spacer -A- between clutch pedal and stop and press clutch pedal to spacer.

♦ Length of spacer = about 40 mm (e.g. 1/2" socket).

– Release securing bar -B- and pull master cylinder out of mounting bracket -arrow 1- and -arrow 2-.

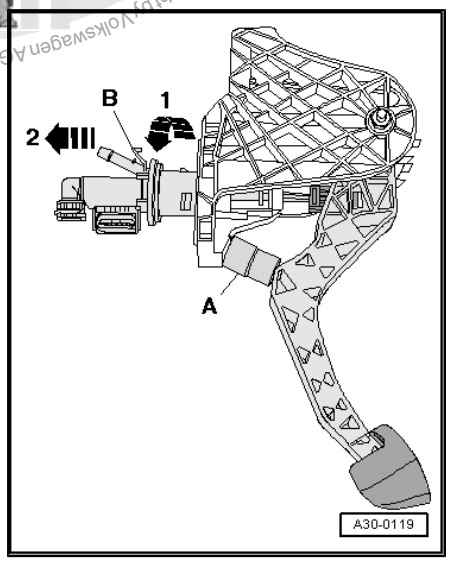

2.6.2 Installing

• Move clutch pedal to rest position at stop.

Protected by copyright. Copying for private or commercial purposes, in part or in whole, is not permitted unless authorised by Volkswagen AG. Volkswagen AG does not guarantee or accept any liability with respect to the correctness of information in this document. Copyright by Volkswagen AG.

Downloaded from www.Manualslib.com manuals search engine

– Attach retainer -2- to master cylinder operating rod -1-.

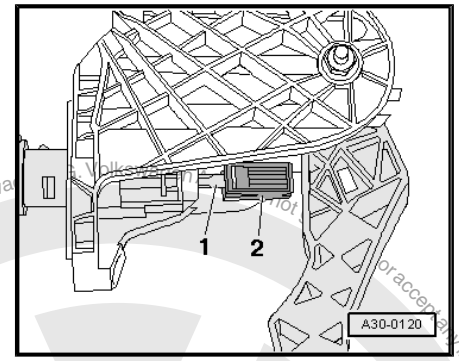

– Insert spacer -A- between clutch pedal and stop and press clutch pedal to spacer.

♦ Length of spacer = about 40 mm (e.g. 1/2" socket).

– Engage master cylinder in mounting bracket -arrow 1- and -arrow 2-.

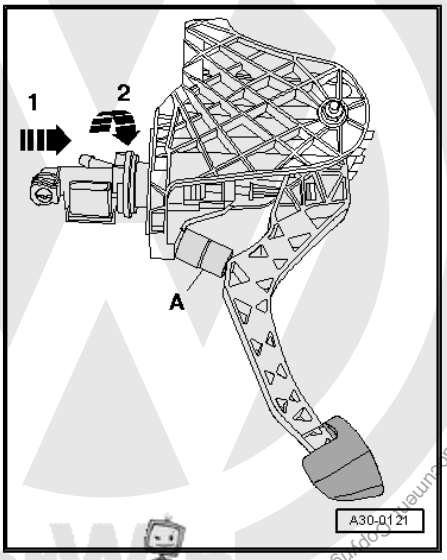

– Press master cylinder operating rod -1- in -direction of arrow- until retainer -2- engages audibly in clutch pedal.

– Install mounting bracket ⇒ page 23 .

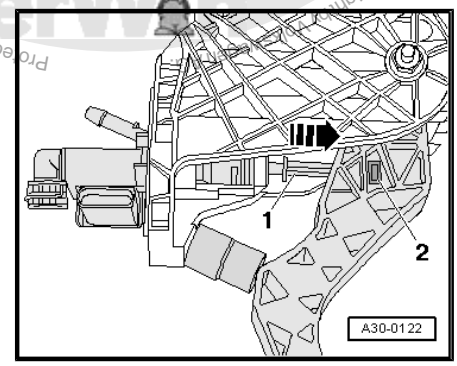

2.7 Removing and installing clutch position sender -G476-

Special tools and workshop equipment required

Downloaded from www.Manualslib.com manuals search engine

♦ Hose clamps -3094-

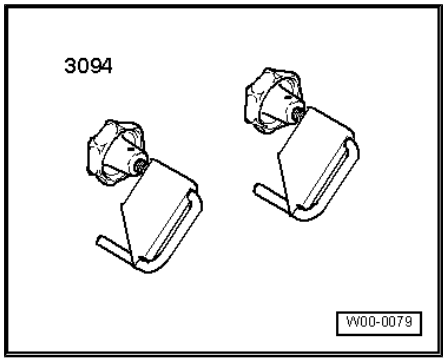

2.7.1 Removing

LHD

– First check whether a coded radio is fitted. If so, obtain anti-theft code.

– With ignition switched off, disconnect battery earth strap ⇒ Electrical system; Rep. gr. 27 ; Disconnecting and connecting battery .

– Remove complete air filter housing if it is near battery ⇒ Rep. gr. 23 ; Repairing diesel direct injection system or ⇒ Rep. gr. 24 ; Repairing injection system .

– Remove battery and battery tray ⇒ Electrical system; Rep. gr. 27 ; Battery; Removing and installing battery .

Right-hand drive

– In vehicles with particle filter, remove shielding -A- from particle filter ⇒ Rep. gr. 26 ; Parts of exhaust system; Assembly overview - front exhaust pipe with particle filter .

An insulation mat is installed in conjunction with some engines.

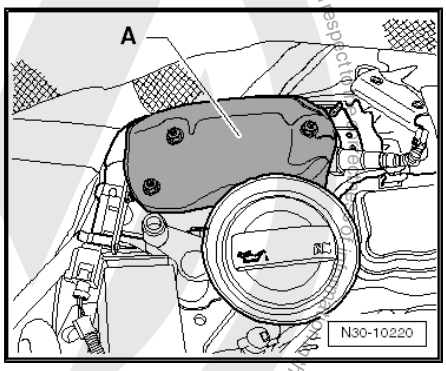

– Remove heat shield from pipe/hose line -arrows-.

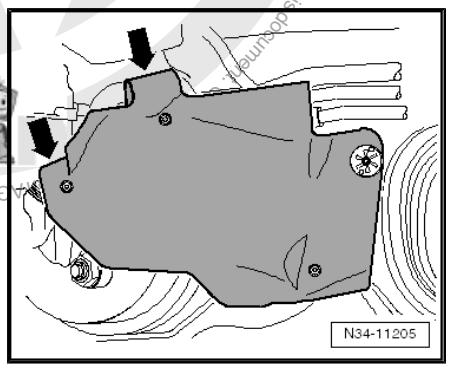

Protected by copyright. Copying for private or commercial purposes, in part or in whole, is not permitted unless authorised by Volkswagen AG. Volkswagen AG does not guarantee or accept any liability with respect to the correctness and completeness of this documentation.

Downloaded from www.Manualslib.com manuals search engine

Protected by copyright. Copying for private or commercial purposes, in whole or in part, is not permitted unless authorised by Volkswagen AG. Volkswagen AG does not guarantee or accept any liability with respect to the correctness of information in this document. Copyright by Volkswagen AG.

Continuation for all

If a pipe/hose line -1- with a round component is installed directly beneath the master cylinder, the pipe/hose line must be removed.

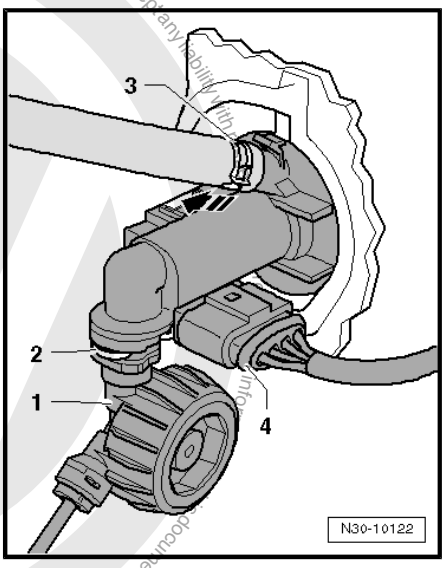

Note

During the following work, ensure that no brake fluid lands on longitudinal member or gearbox. If this does happen, clean the affected areas thoroughly.

– Place a lint-free cloth under the master cylinder.

– Clamp off supply hose to master cylinder using hose clamp to 25 mm ∅ -3094- .

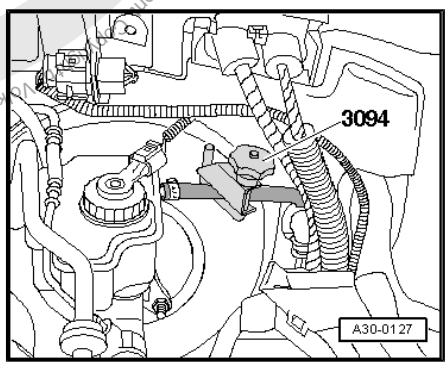

– Release securing clip -2- with a screwdriver or a pointed object and pull out of master cylinder to stop.

– Pull pipe/hose line -1- or plastic line out from master cylinder and seal.

– Disconnect electrical connector -4-.

– Unclip clutch position sender -G476- from master cylinder -arrow- and remove.

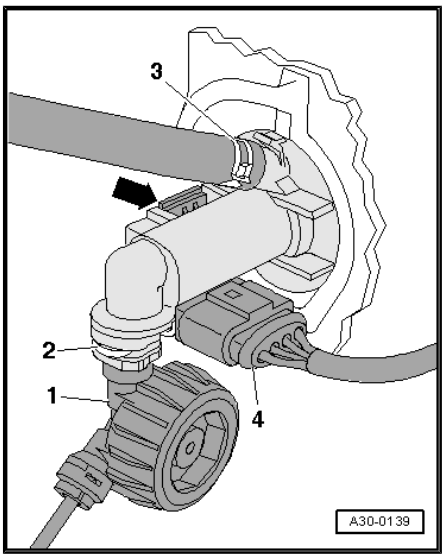

Note

Disregard item -3-.

2.7.2 Installing

Install in the reverse order of removal, observing the following:

Downloaded from www.Manualslib.com manuals search engine

Note

- *Renew hose clips.*
- *Allocate all components according to ⇒ Electronic parts catalogue „ETKA“ .*

If the pipe/hose line was removed

– Push pipe/hose line -1- or plastic line with seal -2- onto connection of master cylinder -4- until securing clip -3- engages audibly.

– Test pipe/hose line by tugging on it.

– After removing hose clamp up to 25 mm ∅ -3094- , return supply hose to its original shape, if necessary.

– Bleed clutch system ⇒ page 37 .

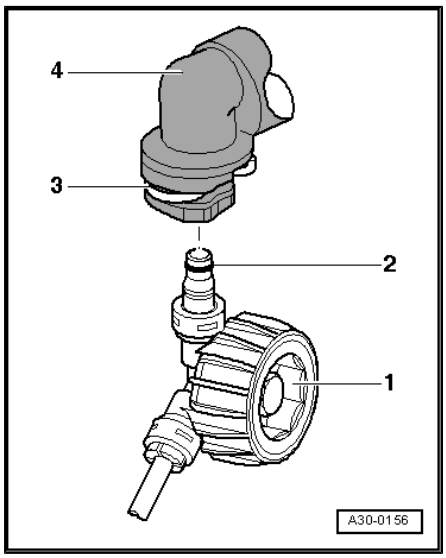

Right-hand drive

– In vehicles with particle filter, install shielding -A- on particle filter ⇒ Rep. gr. 26 ; Parts of exhaust system; Assembly overview - front exhaust pipe with particle filter .

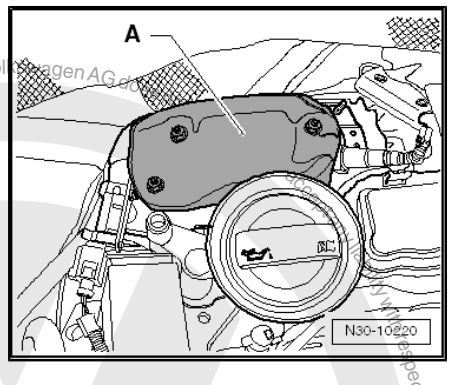

LHD

– Install battery tray and battery ⇒ Electrical system; Rep. gr. 27 ; Removing and installing battery .

– Remove complete air filter housing if it is near battery ⇒ Rep. gr. 23 ; Repairing diesel direct injection system or ⇒ Rep. gr. 24 ; Repairing injection system .

– Reconnect battery and perform work required after connecting battery ⇒ Electrical system; Rep. gr. 27 ; Disconnecting and connecting battery .

Protected by copyright. Copying for private or commercial purposes, in part or in whole, is not permitted unless authorised by Volkswagen AG. Volkswagen AG does not guarantee or accept any liability with respect to the correctness of information in this document. Copyright by Volkswagen AG.

Downloaded from www.Manualslib.com manuals search engine

2.8 Assembly overview - hydraulics (LHD)

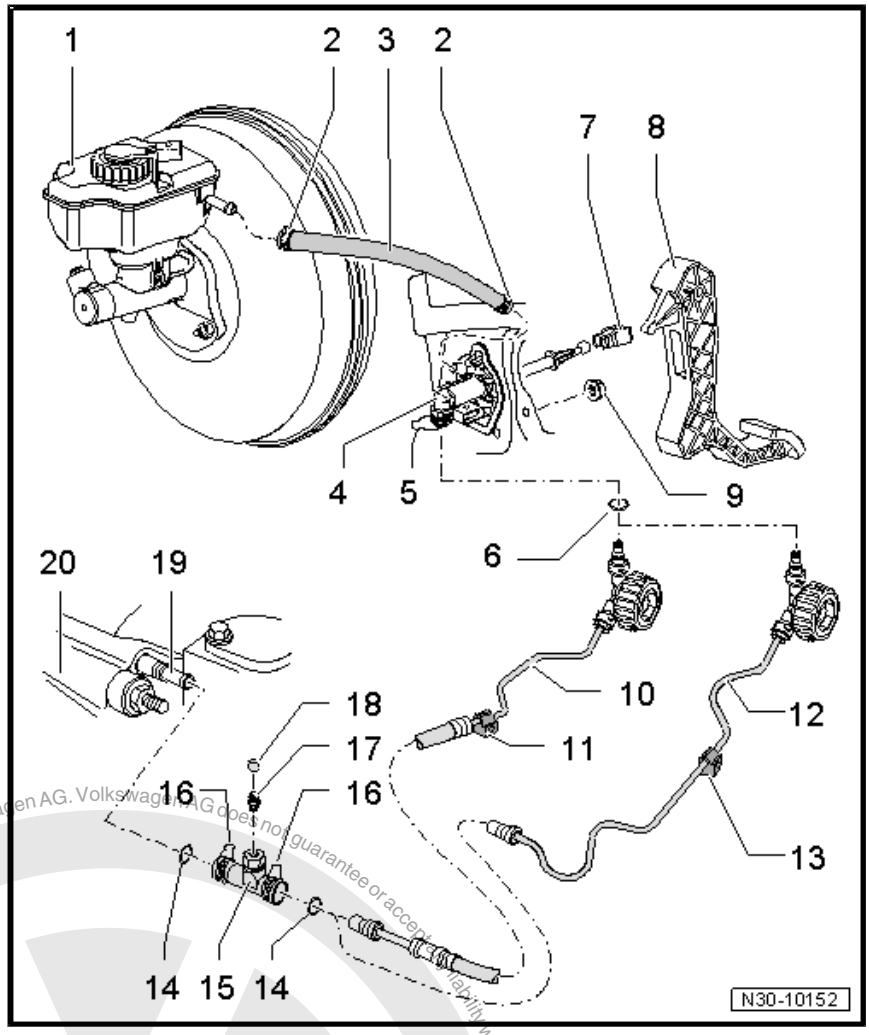

1 - Brake fluid reservoir

2 - Spring-type clip
- ❑ Not fitted in all vehicles

3 - Supply hose
- ❑ Rubber
- ❑ From 12 05, plastic ⇒ page 35

4 - Master cylinder
- ❑ Removing and installing ⇒ page 29

5 - Clip
- ❑ Pull out clip to stop to remove and install pipe/ hose line or plastic line
- ❑ Pulled out to side on some master cylinders

6 - Seal / O-ring
- ❑ Pull onto line connection
- ❑ Insert with brake fluid
- ❑ Seals/O-rings are adapted to configuration of line connection ⇒ page 35
- ❑ Allocation ⇒ Electronic parts catalogue „ETKA“

7 - Retainer
- ❑ To remove and install, separate master cylinder from clutch pedal ⇒ page 19

8 - Clutch pedal
- ❑ Removing and installing ⇒ page 19

9 - Hexagon nut, 25 Nm
- ❑ Self-locking
- ❑ Qty. 3
- ❑ For mounting bracket on bulkhead
- ❑ Always renew

10 - Pipe/hose line
- ❑ Allocation ⇒ Electronic parts catalogue „ETKA“
- ❑ To remove, remove battery and battery tray ⇒ Electrical system; Rep. gr. 27 ; Removing and installing battery .
- ❑ Removing and installing ⇒ page 41

11 - Bracket
- ❑ For pipe/hose line ⇒ Item 10 (page 34)
- ❑ Secured to body
- ❑ Hidden by engine/gearbox mounting
- ❑ Retainer identification ⇒ page 36

Protected by copyright. Copyright for Material or commercial purposes only. Unauthorised by Volkswagen AG. Volkswagen AG does not guarantee or accept any liability with respect to the correctness of information in this document. Copyright by Volkswagen AG.

Downloaded from www.Manualslib.com manuals search engine

Protected by copyright. Copyright by Volkswagen AG. For private, non-commercial use only. Copyright for private or commercial purposes, in part or whole, is not permitted unless authorised by Volkswagen AG. Volkswagen AG does not guarantee or accept any liability with respect to the correctness of information in this document.

12 - Plastic line

- ❑ Allocation ⇒ Electronic parts catalogue „ETKA“
- ❑ To remove, remove battery and battery tray ⇒ Electrical system; Rep. gr. 27 ; Removing and installing battery .
- ❑ Removing and installing ⇒ page 41

13 - Bracket

- ❑ For plastic line ⇒ Item 12 (page 34)
- ❑ Secured to body
- ❑ Hidden by engine/gearbox mounting
- ❑ Retainer identification ⇒ page 36

14 - Seal / O-ring

- ❑ Pull onto line connection
- ❑ Insert with brake fluid
- ❑ Seals/O-rings are adapted to configuration of line connection ⇒ page 35
- ❑ Allocation ⇒ Electronic parts catalogue „ETKA“

15 - Breather

- ❑ Removing and installing ⇒ page 40

16 - Clip

- ❑ Pull out clip to stop to remove and install pipe/hose line or plastic line or bleeder

17 - Bleeder valve

- ❑ Bleeding clutch system ⇒ page 37

18 - Dust cap

19 - Slave cylinder

- ❑ Can be renewed only with gearbox removed
- ❑ Removing and installing ⇒ page 39

20 - Gearbox

Seals and O-rings for pipe/hose line or plastic line

Item	Material of line connection
1	Line connection with circumferential groove -arrow 1-
2	Line connection with shoulder -arrow 2-

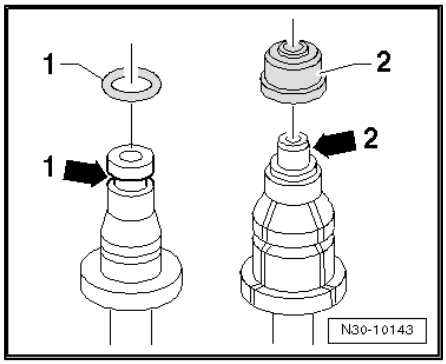

Supply hose -1- of plastic

- The seals -2- must be located in supply hose housing.

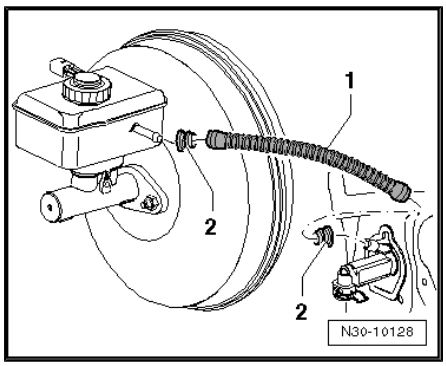

Downloaded from www.Manualslib.com manuals search engine

Retainer identification

Dim. „a“ mm	Line configuration
8	Plastic line
6	Pipe/hose line

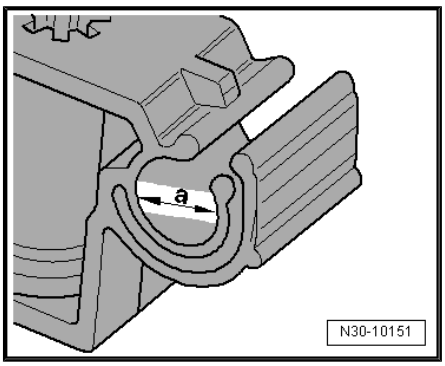

2.9 Assembly overview - hydraulics (RHD)

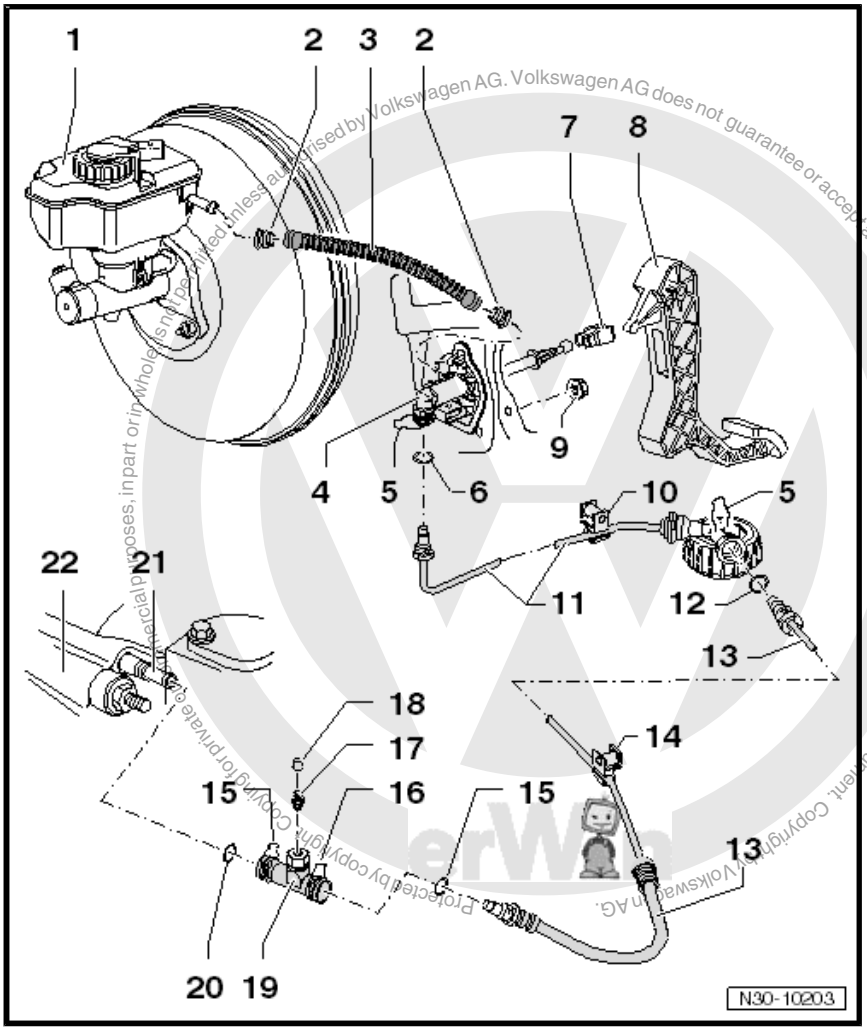

1 - Brake fluid reservoir

2 - Seal

- ❑ For plastic supply hose
- ❑ The seals must be located in supply hose

3 - Supply hose

- ❑ Made of plastic ⇒ page 35
- ❑ May be made of rubber

4 - Master cylinder

- ❑ Removing and installing ⇒ page 29

5 - Clip

- ❑ Pull clip out to stop to remove or install pipe line
- ❑ Pulled out to side on some master cylinders

6 - Seal / O-ring

- ❑ Pull onto line connection
- ❑ Insert with brake fluid
- ❑ Seals/O-rings are adapted to configuration of line connection ⇒ page 35
- ❑ Allocation ⇒ Electronic parts catalogue „ETKA“

7 - Retainer

- ❑ To remove and install, separate master cylinder from clutch pedal ⇒ page 19

8 - Clutch pedal

- ❑ Removing and installing ⇒ page 19

9 - Hexagon nut, 25 Nm

- ❑ Self-locking
- ❑ Qty. 3
- ❑ For mounting bracket on bulkhead
- ❑ Always renew

Protected by copyright. Copying for private or commercial purposes, in part or in whole, is not permitted unless authorised by Volkswagen AG. Volkswagen AG does not guarantee or accept any liability with respect to the correctness of information in this document. Copyright by Volkswagen AG.

Downloaded from www.Manualslib.com manuals search engine

10 - Bracket

- ❑ Secured to body
- ❑ Hidden by engine/gearbox mounting

11 - Pipe line

- ❑ Pipe and hose/pipe line ⇒ Item 13 (page 37) may be in one piece
- ❑ Removing and installing ⇒ page 41
- ❑ Allocation ⇒ Electronic parts catalogue „ETKA“
- ❑ To remove, remove battery and battery tray ⇒ Electrical system; Rep. gr. 27 ; Removing and installing battery .

12 - Seal / O-ring

- ❑ Pull onto line connection
- ❑ Insert with brake fluid
- ❑ Seals/O-rings are adapted to configuration of line connection ⇒ page 35
- ❑ Allocation ⇒ Electronic parts catalogue „ETKA“

13 - Pipe/hose line

- ❑ Pipe ⇒ Item 11 (page 37) and hose/pipe line may be in one piece
- ❑ Removing and installing ⇒ page 41
- ❑ Allocation ⇒ Electronic parts catalogue „ETKA“
- ❑ To remove, remove battery and battery tray ⇒ Electrical system; Rep. gr. 27 ; Removing and installing battery .

14 - Retainer

- ❑ Secured to body

15 - Seal / O-ring

- ❑ Pull onto line connection
- ❑ Insert with brake fluid
- ❑ Seals/O-rings are adapted to configuration of line connection ⇒ page 35
- ❑ Allocation ⇒ Electronic parts catalogue „ETKA“

16 - Clip

- ❑ Pull out clip to stop to remove and install pipe/hose line or bleeder.

17 - Bleeder valve

- ❑ Bleeding clutch system ⇒ page 37

18 - Dust cap

19 - Bleeder connection

- ❑ Removing and installing ⇒ page 40

20 - Seal / O-ring

- ❑ Pull onto line connection
- ❑ Insert with brake fluid
- ❑ Seals/O-rings are adapted to configuration of line connection ⇒ page 35
- ❑ Allocation ⇒ Electronic parts catalogue „ETKA“

21 - Slave cylinder

- ❑ Can be renewed only with gearbox removed
- ❑ Removing and installing ⇒ page 39

22 - Gearbox

2.10 Bleeding clutch system

Special tools and workshop equipment required

Protected by copyright. Copying for private or commercial purposes, in part or in whole, is not permitted unless authorised by Volkswagen AG. Volkswagen AG does not guarantee or accept any liability with respect to the correctness of information in this document. Copyright by Volkswagen AG.

Downloaded from www.Manualslib.com manuals search engine

♦ Brake filling and bleeding equipment -VAS 5234- or

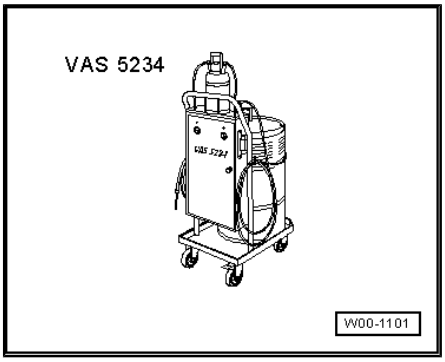

♦ Brake filling and bleeding equipment -V.A.G 1869-

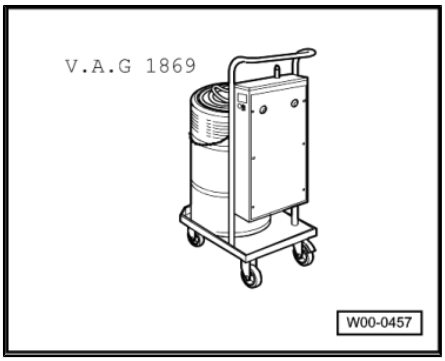

Note

Prefilling system is not necessary!

Specifications for brake fluid ⇒ Brake systems; Rep. gr. 47 ; Bleeding brake system .

– Remove complete air filter housing if it is near battery ⇒ Rep. gr. 23 ; Repairing diesel direct injection system or ⇒ Rep. gr. 24 ; Repairing injection system .

– Connect brake filling and bleeding equipment -VAS 5234- or -V.A.G 1869- .

To bleed system, use 670 mm bleeder hose -V.A.G 1238/B3- if necessary.

– Connect bleeder hose to collector bottle of brake bleeding equipment.

– Connect bleeder hose -A- to bleeder -arrow-.

– Pressurise system to 2 bar.

– Open bleeder valve about $^1/_4$ turn.

– Move clutch pedal 15 to 20 times quickly by hand from stop to stop.

– Close bleeder valve.

– After completing bleeding procedure, when the pressure of 2 bar is released, operate clutch pedal ten more times by foot.

– Remove complete air filter housing if it is near battery ⇒ Rep. gr. 23 ; Repairing diesel direct injection system or ⇒ Rep. gr. 24 ; Repairing injection system .

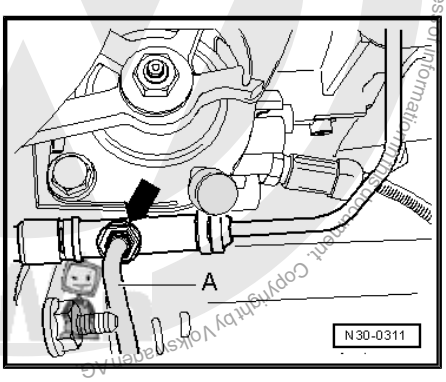

Protected by copyright. Copying for private or commercial purposes in part or in whole, is not permitted unless authorised by Volkswagen AG. Volkswagen AG does not guarantee or accept any liability with respect to the correctness of information in this document. Copyright by Volkswagen AG

Downloaded from www.Manualslib.com manuals search engine

3 Repairing clutch release mechanism

Special tools and workshop equipment required

- Torque wrench -V.A.G 1331-

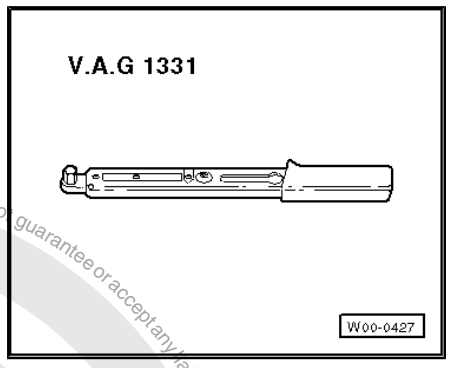

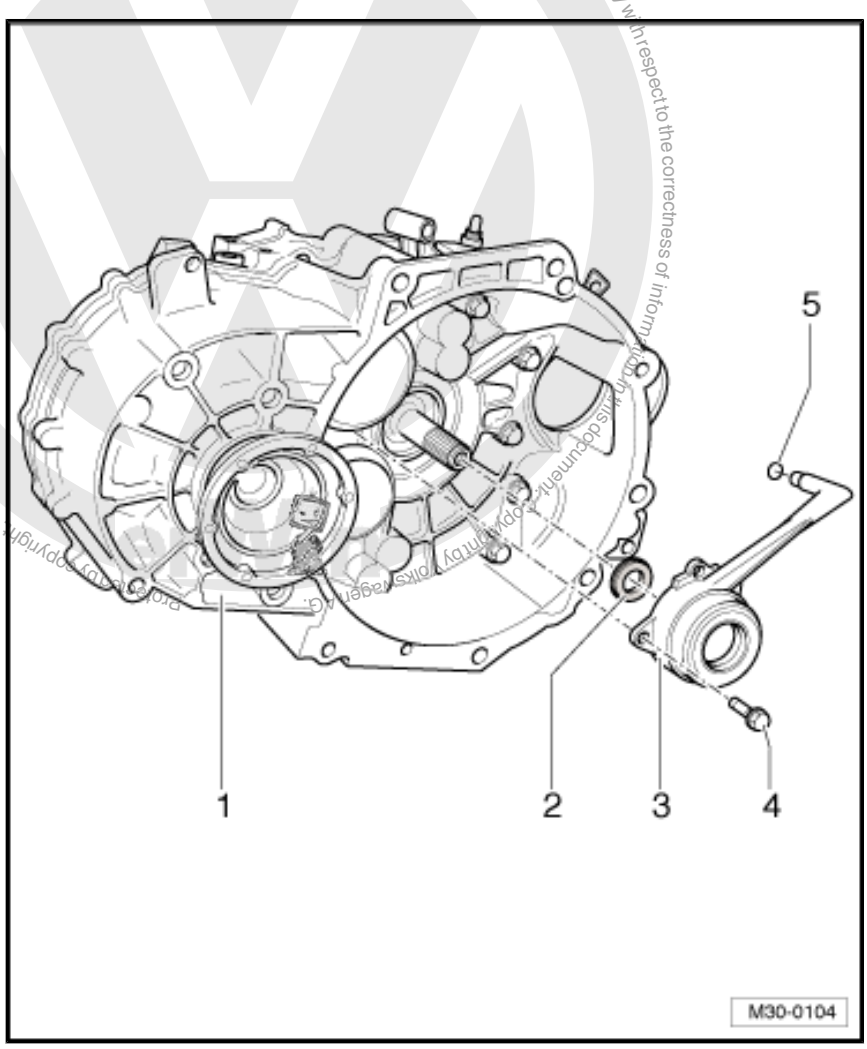

1 - Gearbox

2 - Input shaft seal

- ❑ Renewing ⇒ page 43

3 - Slave cylinder with clutch release bearing

- ❑ Are one unit and can be renewed together only
- ❑ Do not wash out bearing; wipe only
- ❑ Renew noisy bearings together with slave cylinder
- ❑ For some slave cylinders, divided supply line ⇒ page 40
- ❑ Removing and installing ⇒ page 40

4 - Bolt

- ❑ Qty. 3
- ❑ Always renew
- ❑ Without locking fluid 12 Nm (only slave cylinders with metal housing)
- ❑ With locking fluid 15 Nm (for plastic slave cylinders)
- ❑ Carefully tighten diagonally in small steps so that the bolting eyes of the slave cylinder do not break off

5 - O-ring

- ❑ Pull onto line connection
- ❑ Insert with brake fluid
- ❑ Allocation ⇒ Electronic parts catalogue „ETKA“

This document is not permitted unless authorised by Volkswagen AG. Volkswagen AG does not guarantee or accept any liability with respect to the correctness of information in this document. Copyright by Volkswagen AG.

Downloaded from www.Manualslib.com manuals search engine

Slave cylinder -A- with divided supply line

The supply line for some slave cylinders is divided in the area of the -arrow-.

Allocation ⇒ Electronic parts catalogue „ETKA“

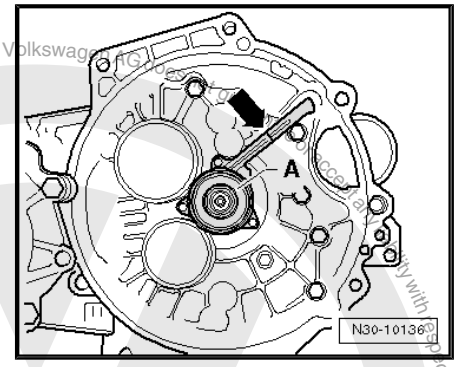

3.1 Removing pipe/hose line and bleeder from and installing on slave cylinder

Removing pipe/hose line or plastic line from and installing on bleeder

– To remove, release securing clip -2- with a screwdriver or pointed object and pull pipe/hose line or plastic line -4- off bleeder -1-.

– To install pipe/hose line or plastic line, push onto bleeder connection with O-ring -3- until securing clip engages audibly.

– Test line by tugging on it.

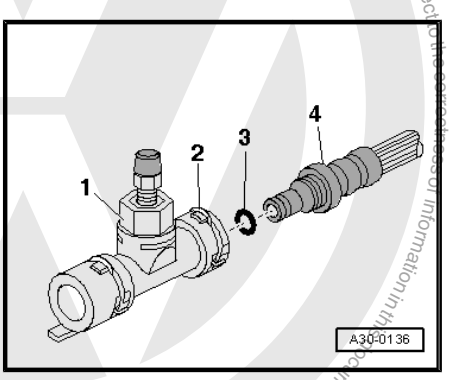

Removing bleeder from and installing on slave cylinder

– To remove, release securing clip -2- with a screwdriver or pointed object and pull bleeder -4- off slave cylinder -1-.

– To install, check O-ring -3- on slave cylinder. Press bleeder onto slave cylinder connection until securing clip engages audibly.

– Check by pulling on bleeder.

– Bleed clutch system ⇒ page 37 .

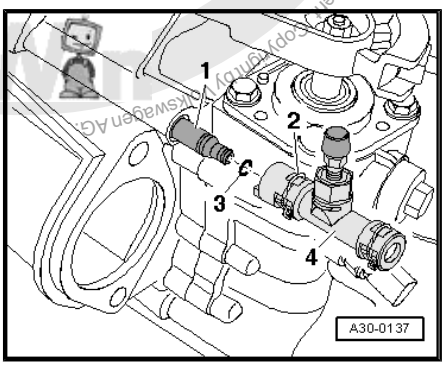

3.2 Removing and installing slave cylinder with release bearing

Note

Slave cylinder and release bearing are a single component and can be renewed only together.

Removing

- Remove gearbox.

Downloaded from www.Manualslib.com manuals search engine

– Release securing clip -2- with a screwdriver or pointed object and pull bleeder -4- off slave cylinder -1-.

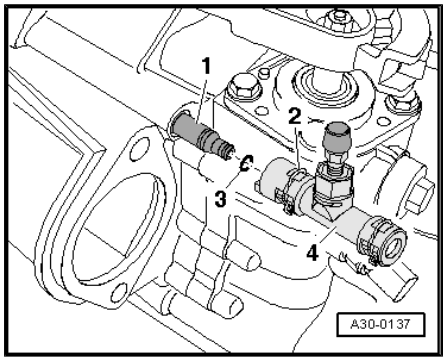

– Remove bolts -arrows-.

– Remove slave cylinder together with release bearing -A-.

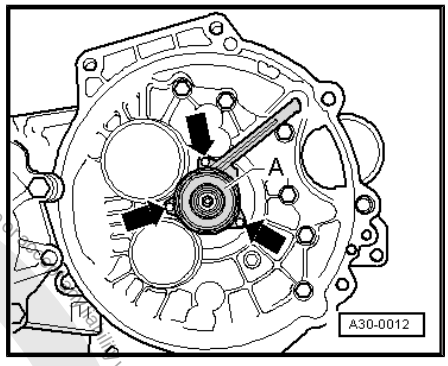

Installing

Install in the reverse order of removal, observing the following:

• The securing bolts for the slave cylinder must be tightened only in small stages.

Otherwise, the tabs with the bolt holes may break off.

– Bolt on slave cylinder with release bearing ⇒ Item 4 (page 39) .

.

– Check O-ring -3- on slave cylinder for damage.

– Press bleeder -4- onto slave cylinder connection -1- until securing clip -2- engages audibly.

– Check by pulling on bleeder.

• Install gearbox.

– Bleed clutch system ⇒ page 37 .

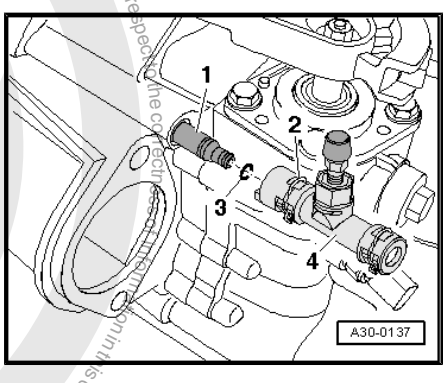

3.3 Removing and installing pipe/hose line or plastic line

Special tools and workshop equipment required

♦ Hose clamps to 25 mm -3094-

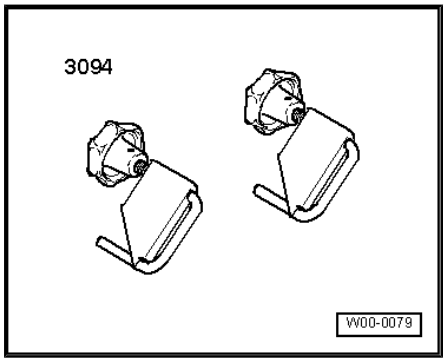

Protected by copyright. Copyright by Volkswagen AG. Volkswagen AG does not guarantee or assume any liability with respect to the correctness of information in this document. Copyright by Volkswagen AG. Protected by copyright. Copying for private or commercial purposes, in part or in whole, is not permitted unless authorised by Volkswagen AG. Volkswagen AG does not guarantee or assume any liability with respect to the correctness of information in this document. Copyright by Volkswagen AG.

Downloaded from www.Manualslib.com manuals search engine

Protected by copyright. Copying for private or commercial purposes, in part or in whole, is not permitted unless authorised by Volkswagen AG. Volkswagen AG does not guarantee or accept any liability with respect to the correctness of information in this document. Copyright by Volkswagen AG.

Removing

– Remove complete air filter housing ⇒ Rep. gr. 23 ; Repairing diesel direct injection system or ⇒ Rep. gr. 24 ; Repairing injection system .

Note

During the following work, ensure that no brake fluid lands on longitudinal member or gearbox. If this does happen, clean the affected areas thoroughly.

– Clamp off supply hose to master cylinder using hose clamp -3094- .

Remove pipe/hose line or plastic line from master cylinder as follows:

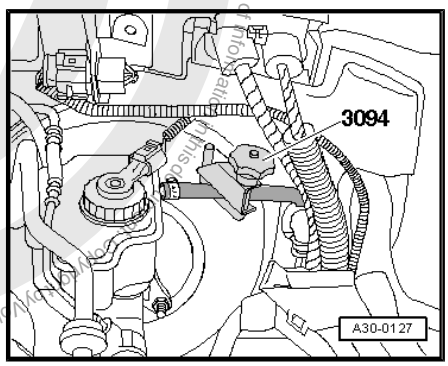

– Release securing clip -3- using screwdriver or pointed object and pull off line -1- with O-ring -2-.

Caution

Do not depress clutch pedal after removing slave cylinder.

Remove pipe/hose line or plastic line from bleeder as follows:

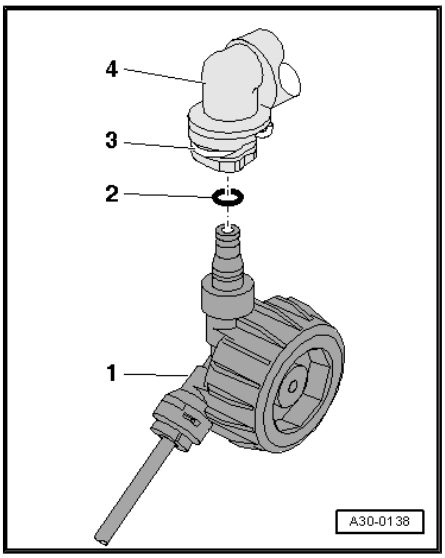

– Release securing clip -2- using screwdriver or pointed object and pull line -4- with O-ring -3- off bleeder -1-.

Installing

Install in the reverse order of removal, observing the following:

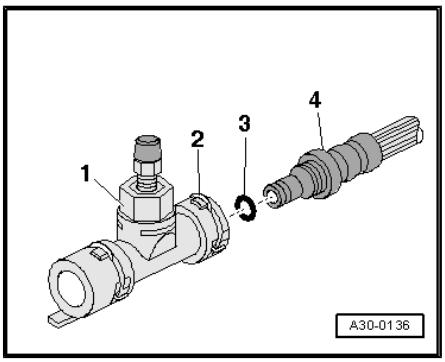

Downloaded from www.Manualslib.com manuals search engine

Protected by copyright. Copyright by Volkswagen AG.
Copyright by Volkswagen AG. Volkswagen AG does not guarantee or accept any liability with respect to the correctness of information. Copying for private or commercial purposes, in part or in whole, is not permitted unless authorised by Volkswagen AG.

– Push pipe/hose line or plastic line -1- with O-ring -2- onto connection of master cylinder -4- until securing clip -3- engages audibly.
– Test line by tugging on it.

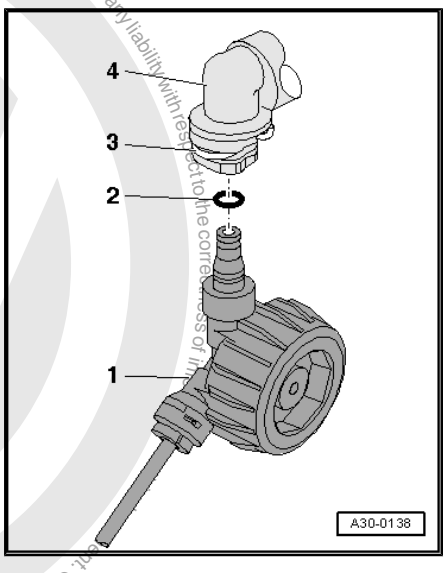

– Push line with O-ring -3- onto bleeder connection until securing clip engages audibly.
– Test line by tugging on it.
– After removing hose clamp up to 25 mm ∅ -3094- , return supply hose to its original shape, if necessary.
– Bleed clutch system ⇒ page 37 .
– Install complete air filter housing ⇒ Rep. gr. 23 ; Repairing diesel direct injection system or ⇒ Rep. gr. 24 ; Repairing injection system

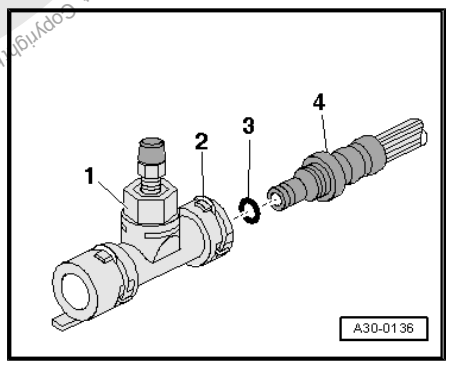

3.4 Renewing input shaft seal

Special tools and workshop equipment required

♦ extractor lever -T20143/1-

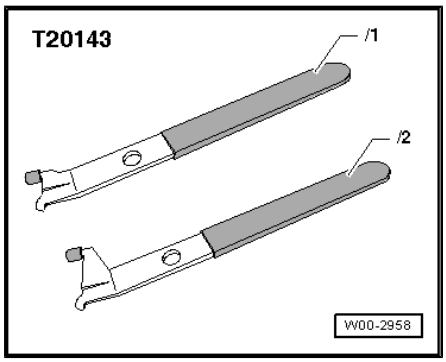

Downloaded from www.Manualslib.com manuals search engine

♦ Thrust piece -T40008-

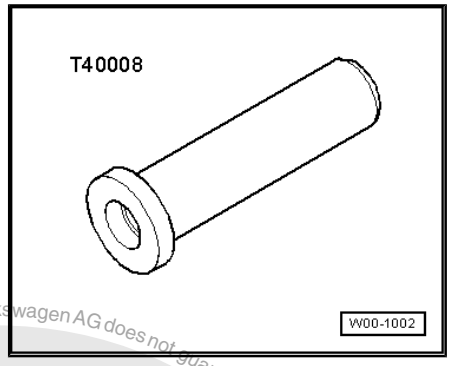

♦ Sealing grease -G 052 128 A1-

Procedure

- Remove gearbox.
- – Remove slave cylinder with release bearing ⇒ page 40 .
- – Lever out seal for input shaft using lever -T20143/1- .

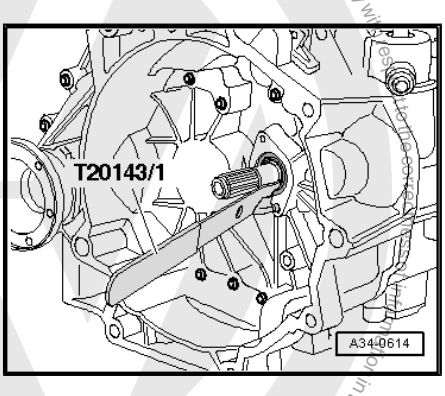

Note

Do not damage running surface of input shaft for oil seal.

- – Half-fill space between sealing lip and dust lip -arrow- with sealing grease -G 052 128 A1- .
- – Lightly moisten outer circumference of oil seal with gear oil.

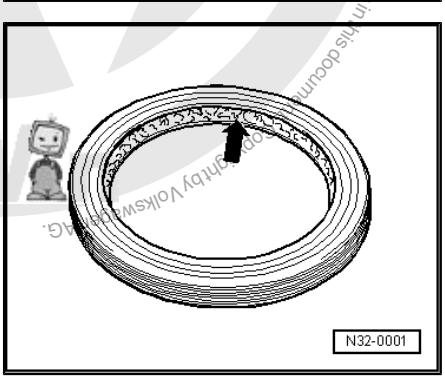

- – Drive seal in flush using thrust piece -T40008- .
- – Install slave cylinder with release bearing ⇒ page 40 .
- • Install gearbox.

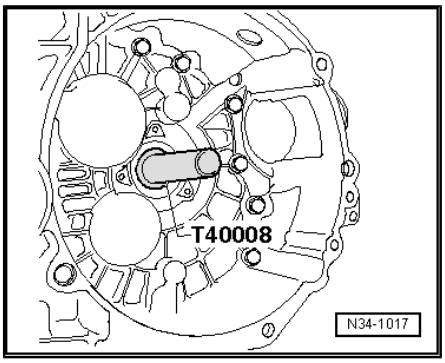

Protected by copyright. Copying for private or commercial purposes, in part or in whole, is not permitted unless authorised by Volkswagen AG. Volkswagen AG does not guarantee or accept any liability with respect to the correctness of information in this document.

Downloaded from www.Manualslib.com manuals search engine

4 Repairing clutch - vehicles with turbo diesel engine

Special tools and workshop equipment required

- Counterhold -3067-
- Torque wrench -V.A.G 1331-
- Centring mandrel -T10097-
- Grease for clutch plate splines -G 000 100-

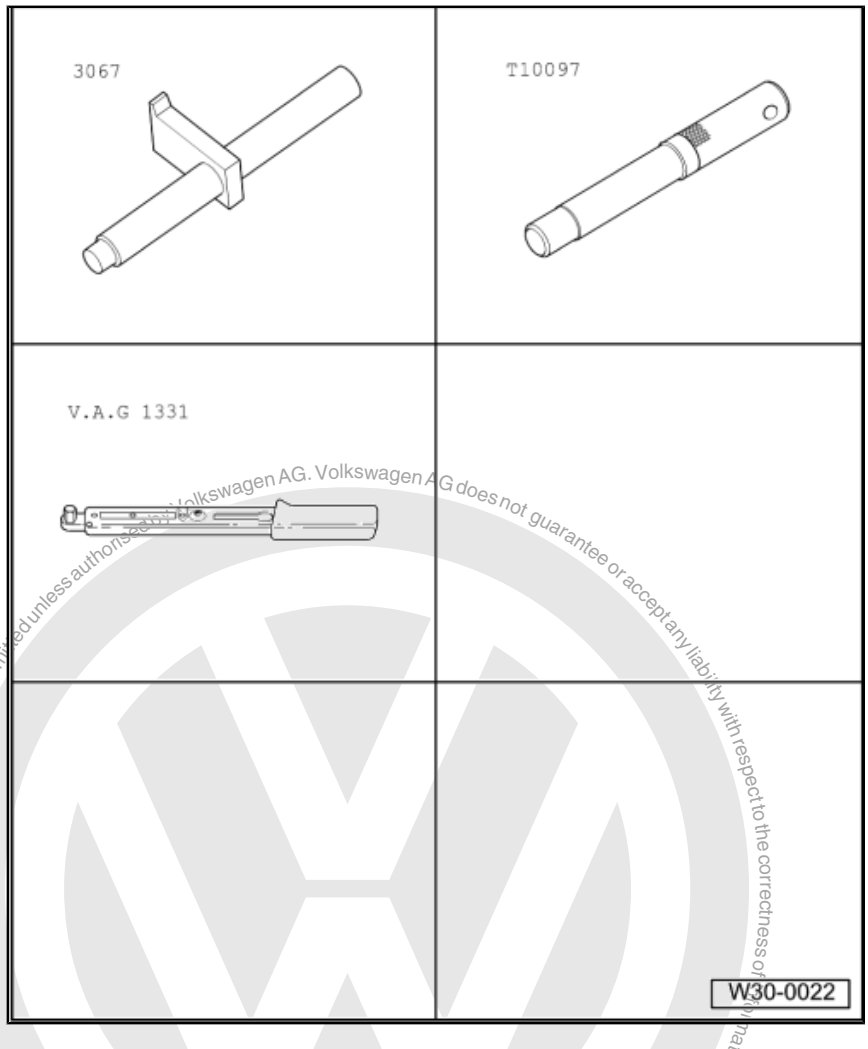

- For engines having a crankshaft of smaller diameter or having needle bearings in the crankshaft - ⇒ page 49 centring mandrel -3176-

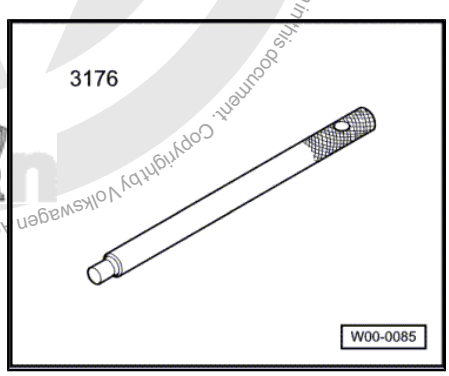

4.1 Determining clutch manufacturer

A clutch manufactured by either „Sachs“ or „LuK“ may be installed.

The make of the clutch can be determined as follows with the clutch installed:

Protected by copyright. Copying for commercial purposes, in part or in whole, is not permitted unless authorised by Volkswagen AG. Volkswagen AG does not guarantee or accept any liability with respect to the correctness of information in this document. Copyright by Volkswagen AG.

Downloaded from www.Manualslib.com manuals search engine

– Remove noise insulation ⇒ General body repairs, exterior; Rep. gr. 50 ; Noise insulation .

– Remove noise insulation from engine sump if necessary.

Some notches -arrows- are located in lower region of sump between engine -A- and gearbox -B-.

– Check outer contour of flywheel through these notches.

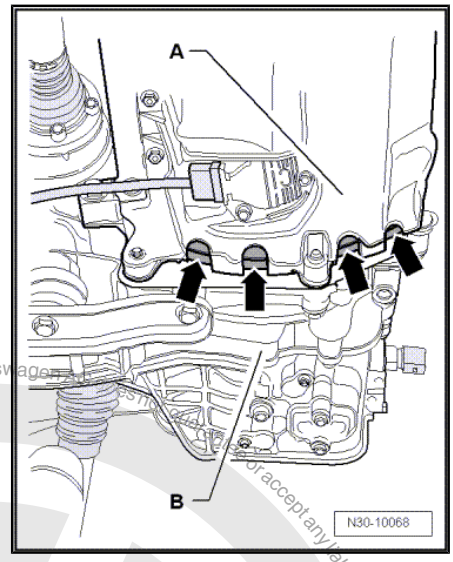

– In addition, a small cover plate -A- can be removed -arrows- to enable inspection of flywheel's outer contour.

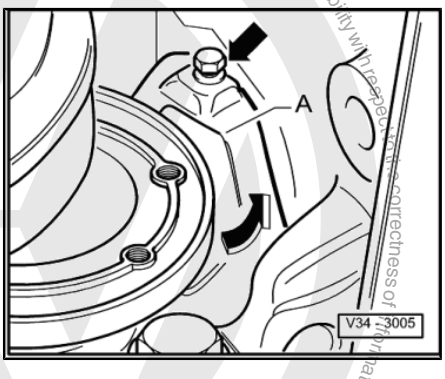

Round outer contour -arrows- = Sachs clutch = -A-

– Removing and installing Sachs clutch ⇒ page 47 .

– Repairing Sachs clutch ⇒ page 50 .

Outer contour with edges -arrows 1- and, in addition, a circumferential crease -arrow 2- = LuK clutch = -B-

or

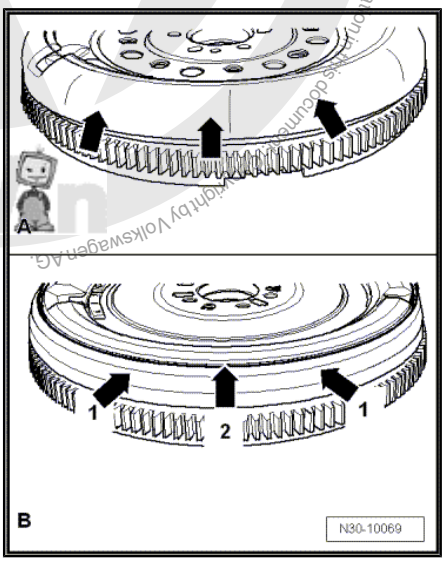

Protected by copyright. Copying for private or commercial purposes, in part or in whole, is not permitted unless authorised by Volkswagen AG. Volkswagen AG does not guarantee or accept any liability with respect to the correctness of information in this document. Copyright by Volkswagen AG.

Downloaded from www.Manualslib.com manuals search engine

Rounded outer contour -arrows 1- and a circumferential crease -arrow 2- = LuK clutch = -B-

– Removing and installing LuK clutch ⇒ page 50 .

– Repairing LuK clutch ⇒ page 53 .

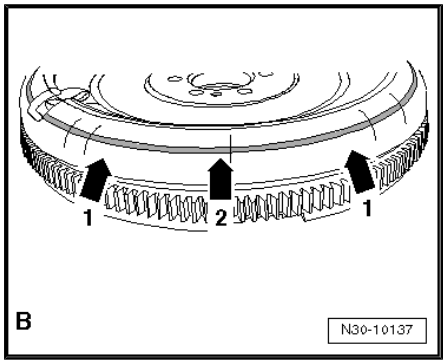

4.2 Removing and installing „Sachs“ clutch

Removing

– Remove gearbox ⇒ page 85 .

– Use counterhold -3067- to loosen bolts.

– Loosen bolts in small steps and diagonally.

• As bolts are removed, stop -2- with pin -1- must loosen.

– If stop does not loosen, press pin towards dual-mass flywheel.

– Remove pressure plate and clutch plate.

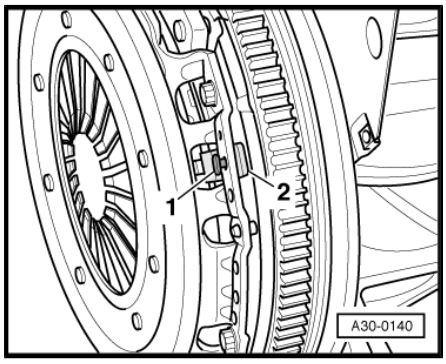

Installing

Install in the reverse order of removal, observing the following:

Note

♦ *Select clutch plate and pressure plate according to engine code and ⇒ Electronic parts catalogue „ETKA“.*

♦ *Check whether dowel sleeves for aligning engine and gearbox are fitted in cylinder block and install if necessary.*

♦ *If dowel sleeves are not fitted, difficulties shifting gears, clutch problems and possible noises from the gearbox (rattling of gears which are not engaged) could occur.*

Installation position of clutch plate

• Lettering „Getriebeseite“ and protruding spring cage face gearbox.

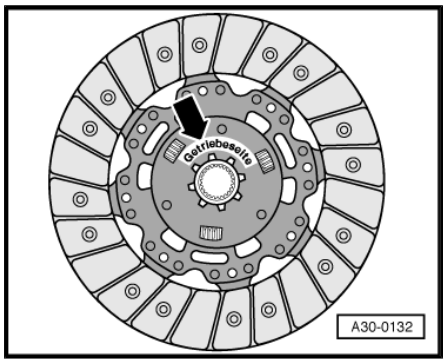

Protected by copyright. Copying for private or commercial purposes, in part or in whole, is not permitted unless authorised by Volkswagen AG. Volkswagen AG does not guarantee or accept any liability with respect to the correctness of information in this document. Copyright by Volkswagen AG.

Downloaded from www.Manualslib.com manuals search engine

Checking ends of diaphragm spring

- Wear to half the thickness of the diaphragm spring -arrows- is permitted.

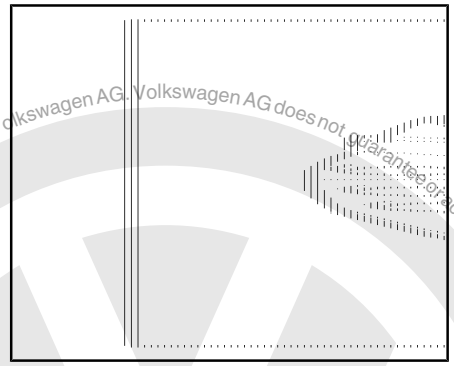

Checking spring connections and riveted connections

– Check spring connections between pressure plate and cover for cracks as well as rivet connections for secure seating.

- A pressure plate with damaged spring connections or with loose rivet connections -arrows- must be renewed.

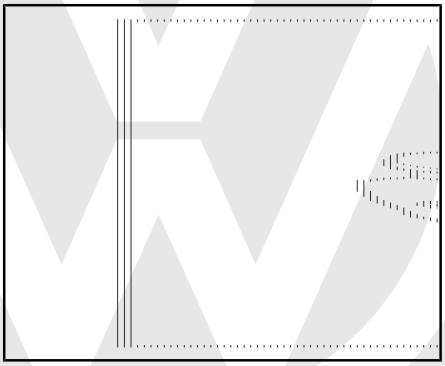

Note

- *Renew clutch plates and pressure plates with damaged or loose rivet connections.*
- *Select clutch plate and pressure plate according to engine code and ⇒ Electronic parts catalogue „ETKA“.*
- *Clean input shaft splines and, on used clutch plates, clean hub splines; remove corrosion and apply only a very thin coat of clutch plate spline grease -G 000 100- to splines. Then move clutch plate to and fro on input shaft until hub moves freely on shaft. Remove excessive grease.*
- *Pressure plates are protected against corrosion and greased. Clean contact surface only. Otherwise, the service life of the clutch will be considerably reduced.*
- *Pressure plate contact surface and clutch plate lining must make full contact with flywheel. Only then insert securing bolts.*

– Reverse counterhold tool -3067- for installation.

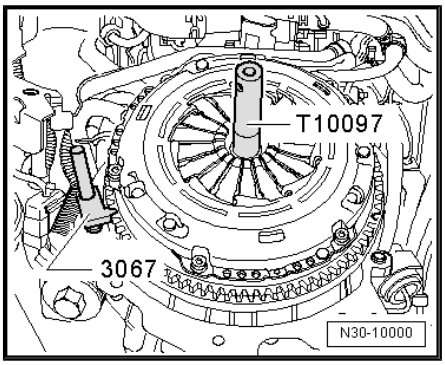

Protected by copyright. Copying for private or commercial purposes, in part or in whole, is not permitted unless authorised by Volkswagen AG. Volkswagen AG does not guarantee or accept any liability with respect to the correctness of information in this document. Copyright by Volkswagen AG.

Downloaded from www.Manualslib.com manuals search engine

For engines having a crankshaft of smaller diameter -arrow- or having an needle bearing -arrow- in the crankshaft

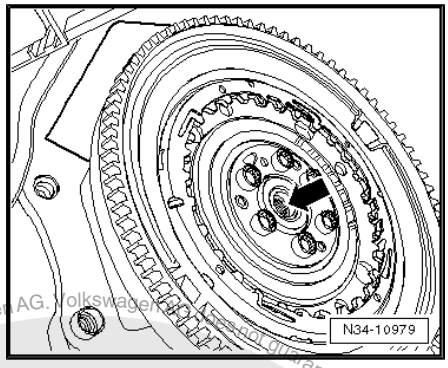

Centring clutch disc and removing and installing pressure plate for engines having a crankshaft of smaller diameter or having a needle bearing -arrow- in the crankshaft

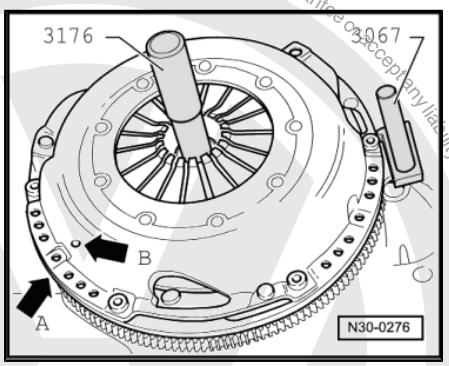

Note

Disregard arrows -A- and -B-.

Continuation for all

- Push pressure plate onto centralizing pins.
- Tighten all bolts evenly by hand until bolt heads contact pressure plate.
- Tighten bolts in small steps diagonally in order not to damage centring holes of pressure plate and centring pins of dual-mass flywheel ⇒ Item 4 (page 50) .
- Install gearbox ⇒ page 85 .

Protected by copyright. Copying for private or commercial purposes, in part or in whole, is not permitted unless authorised by Volkswagen AG. Volkswagen AG does not guarantee or accept any liability with respect to the correctness of information in this document. Copyright by Volkswagen AG.

Downloaded from www.Manualslib.com manuals search engine

4.3 Repairing „Sachs“ clutch

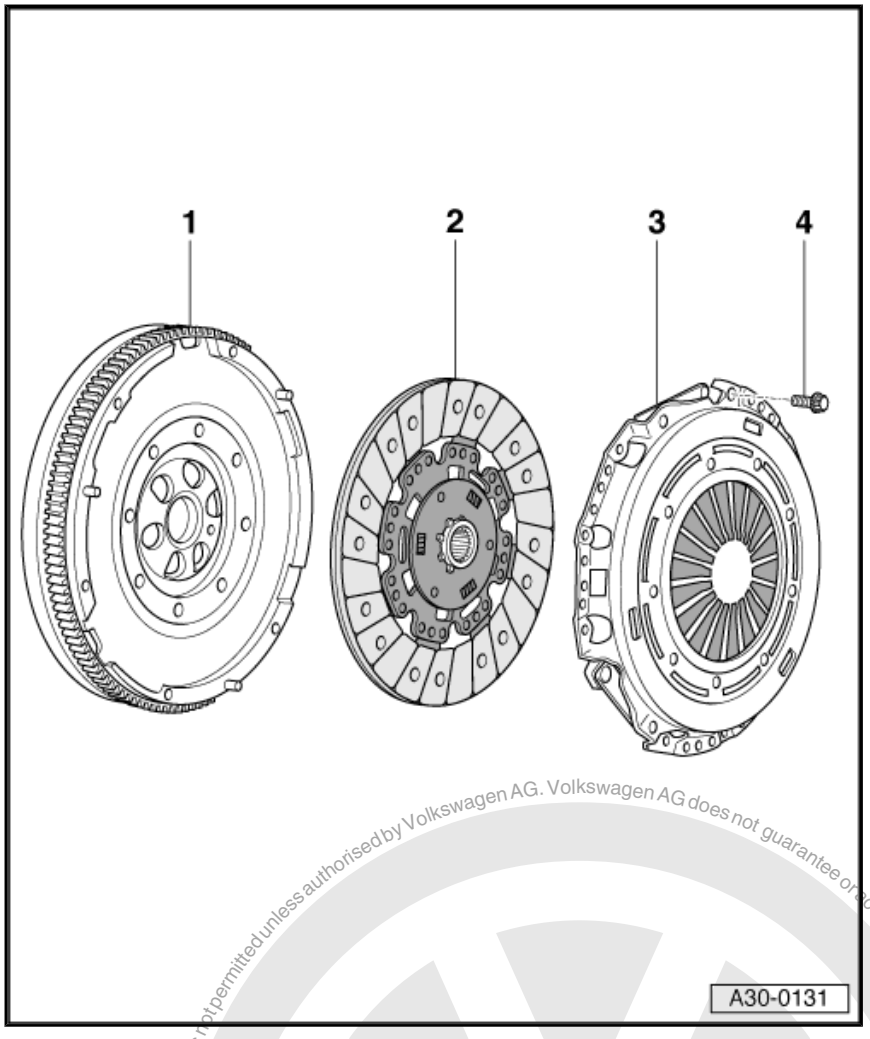

1 - Dual-mass flywheel

- ❑ Removing and installing ⇒ Rep. gr. 13
- ❑ Ensure that centring pins fit tightly
- ❑ Contact surface for clutch lining must be free of grooves, oil and grease

2 - Clutch plate

- ❑ Allocation ⇒ Electronic parts catalogue „ETKA“
- ❑ Renew only together with pressure plate
- ❑ Removing and installing ⇒ page 47
- ❑ Installation position ⇒ page 47

3 - Thrust plate

- ❑ With adjusting mechanism
- ❑ Allocation ⇒ Electronic parts catalogue „ETKA“
- ❑ Renew only together with clutch plate.
- ❑ Removing and installing ⇒ page 47
- ❑ Check ends of diaphragm spring ⇒ page 48
- ❑ Check spring connections and riveted connections ⇒ page 48 .

4 - M6 bolt, 13 Nm, M7 bolt, 20 Nm

- ❑ Allocation ⇒ Electronic parts catalogue „ETKA“
- ❑ Loosen or tighten diagonally in small steps

4.4 Removing and installing „LuK“ clutch

Removing

– Remove gearbox ⇒ page 85 .

– Use counterhold -3067- to loosen bolts.

– Loosen bolts in small steps and diagonally.

– Remove pressure plate and clutch plate.

Installing

Install in the reverse order of removal, observing the following:

Protected by copyright. Copying for private or commercial purposes, in part or whole, is not permitted unless authorised by Volkswagen AG. Volkswagen AG does not guarantee or accept any liability with respect to the correctness of information in this document. Copyright by Volkswagen AG.

Downloaded from www.Manualslib.com manuals search engine

Note

- *Select clutch plate and pressure plate according to engine code and ⇒ Electronic parts catalogue „ETKA“.*
- *Check whether dowel sleeves for aligning engine and gearbox are fitted in cylinder block and install if necessary.*
- *If dowel sleeves are not fitted, difficulties shifting gears, clutch problems and possible noises from the gearbox (rattling of gears which are not engaged) could occur.*

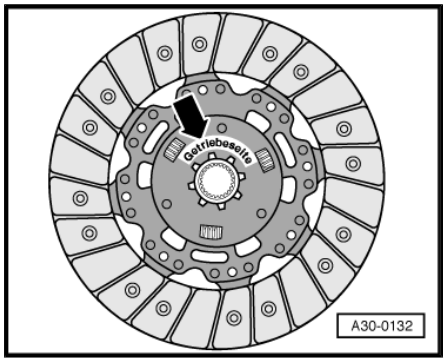

Installation position of clutch plate

- Lettering „Getriebeseite“ (gearbox side) faces gearbox.

Checking ends of diaphragm spring

- Wear to half the thickness of the diaphragm spring -arrows- is permitted.

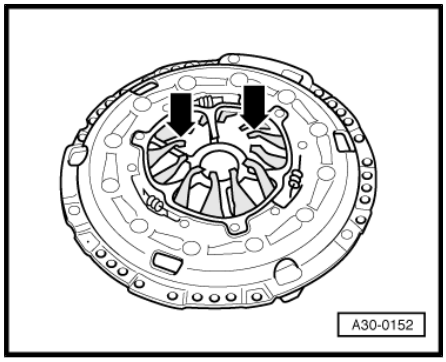

Checking spring connections and riveted connections

– Check spring connections -arrows A- for damage and riveted connections -arrows B- for secure seating.

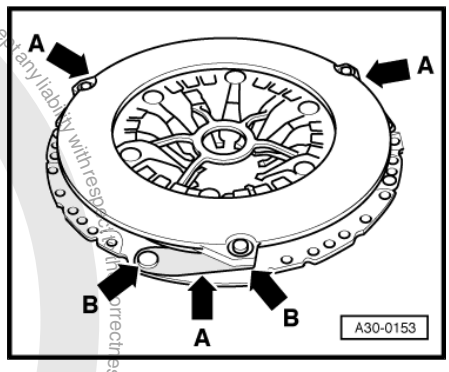

Protected by copyright. Copying for private or commercial purposes, in part or in whole, is not permitted unless authorised by Volkswagen AG. Volkswagen AG does not guarantee or accept any liability with respect to the correctness of information in this document. Copyright by Volkswagen AG.

Downloaded from www.Manualslib.com manuals search engine

Checking position of adjusting mechanism with new pressure plates only

- Both edges -A- of the adjuster ring must be located between the two notches -arrows B-.
- If the adjuster ring takes up a different position in new pressure plates, the pressure plate and clutch plate are not allowed to be installed.
- The adjuster ring may take up a position outside the notches in used clutches.

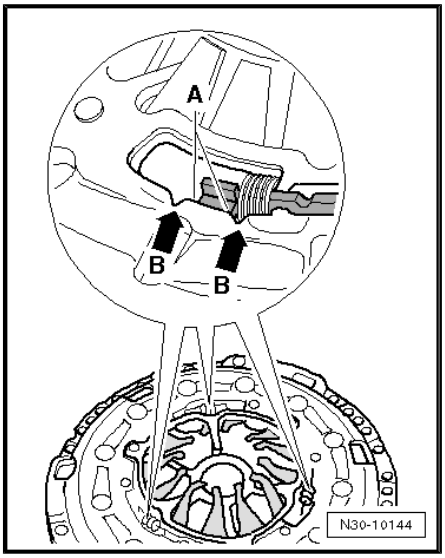

Note

- *Renew clutch plates and pressure plates with damaged or loose rivet connections.*
- *Renew pressure plate and clutch plate together only.*
- *Select clutch plate and pressure plate according to engine code and ⇒ Electronic parts catalogue „ETKA“.*
- *Clean input shaft splines and, on used clutch plates, clean hub splines; remove corrosion and apply only a very thin coat of clutch plate spline grease -G 000 100- to splines. Then move clutch plate to and fro on input shaft until hub moves freely on shaft. Remove excessive grease.*
- *Pressure plates are protected against corrosion and greased. Clean contact surface only. Otherwise, the service life of the clutch will be considerably reduced.*
- *Pressure plate contact surface and clutch plate lining must make full contact with flywheel. Only then insert securing bolts.*

– Reverse counterhold tool -3067- for installation.

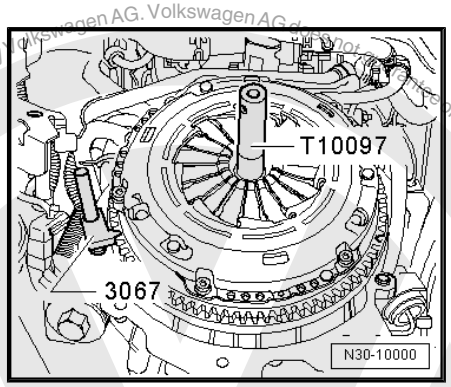

For engines having a crankshaft of smaller diameter -arrow- or having an needle bearing -arrow- in the crankshaft

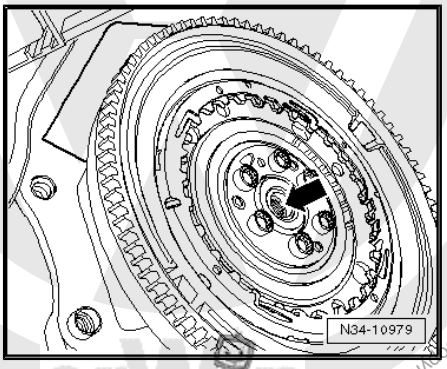

Protected by copyright. Copying for private or commercial purposes, in part or in whole, is not permitted unless authorised by Volkswagen AG. Volkswagen AG does not guarantee or accept any liability with respect to the correctness of information in this document. Copyright by Volkswagen AG.

Downloaded from www.Manualslib.com manuals search engine

Centring clutch disc and removing and installing pressure plate for engines having a crankshaft of smaller diameter or having a needle bearing -arrow- in the crankshaft

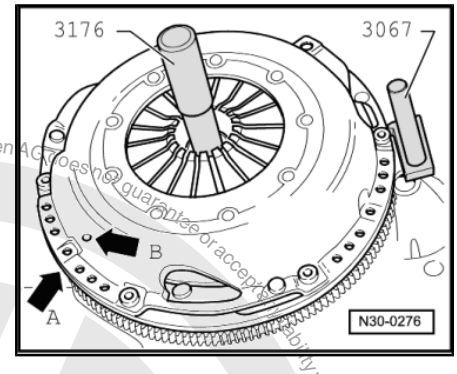

Note

Disregard arrows -A- and -B-.

Continuation for all

- Push pressure plate onto centralizing pins.
- Tighten all bolts evenly by hand until bolt heads contact pressure plate.
- Tighten bolts in small steps diagonally in order not to damage centring holes of pressure plate and centring pins of dual-mass flywheel ⇒ Item 4 (page 53) .
- Install gearbox ⇒ page 85 .

4.5 Repairing „LuK“ clutch

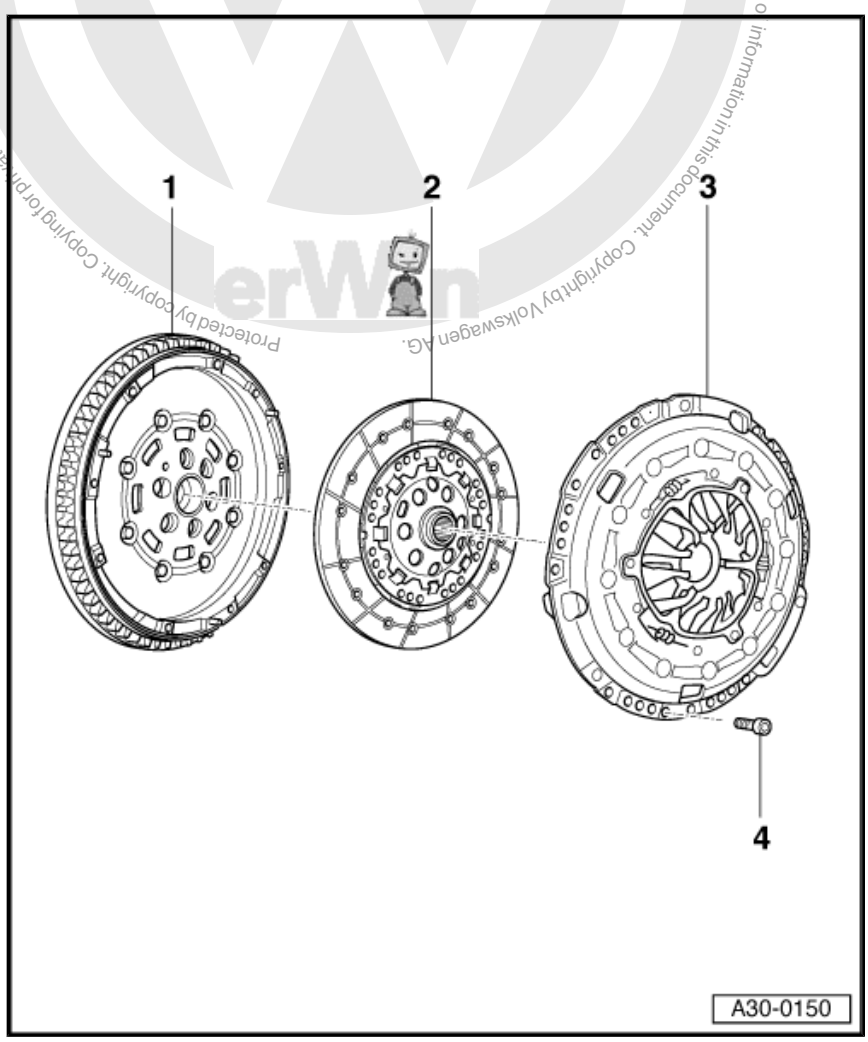

1 - Dual-mass flywheel

- ❑ Removing and installing ⇒ Rep. gr. 13
- ❑ Ensure that centring pins fit tightly
- ❑ Contact surface for clutch lining must be free of grooves, oil and grease

2 - Clutch plate

- ❑ Allocation ⇒ Electronic parts catalogue „ETKA“
- ❑ Removing and installing ⇒ page 50
- ❑ Renew only together with SAC pressure plate.
- ❑ Installation position: ⇒ page 51 .

3 - SAC pressure plate

- ❑ SAC means „self-adjusting clutch“.
- ❑ Renew only together with clutch plate.
- ❑ Allocation ⇒ Electronic parts catalogue „ETKA“
- ❑ Removing and installing ⇒ page 50
- ❑ Check ends of diaphragm spring ⇒ page 51
- ❑ Check spring connections and riveted connections ⇒ page 51 .

4 - M6 bolt, 13 Nm, M7 bolt, 20 Nm

- ❑ Loosen or tighten diagonally in small steps

Protected by copyright. Copying for private or commercial purposes, in part or in whole, is not permitted unless authorised by Volkswagen AG. Volkswagen AG does not guarantee or accept any liability with respect to the correctness of information in this document. Copyright by Volkswagen AG.

Downloaded from www.Manualslib.com manuals search engine

5 Repairing clutch - vehicles with petrol engine

Special tools and workshop equipment required

- Counterhold -3067-
- Centring mandrel -T10097-
- Torque wrench -V.A.G 1331-
- Grease for clutch plate splines -G 000 100-

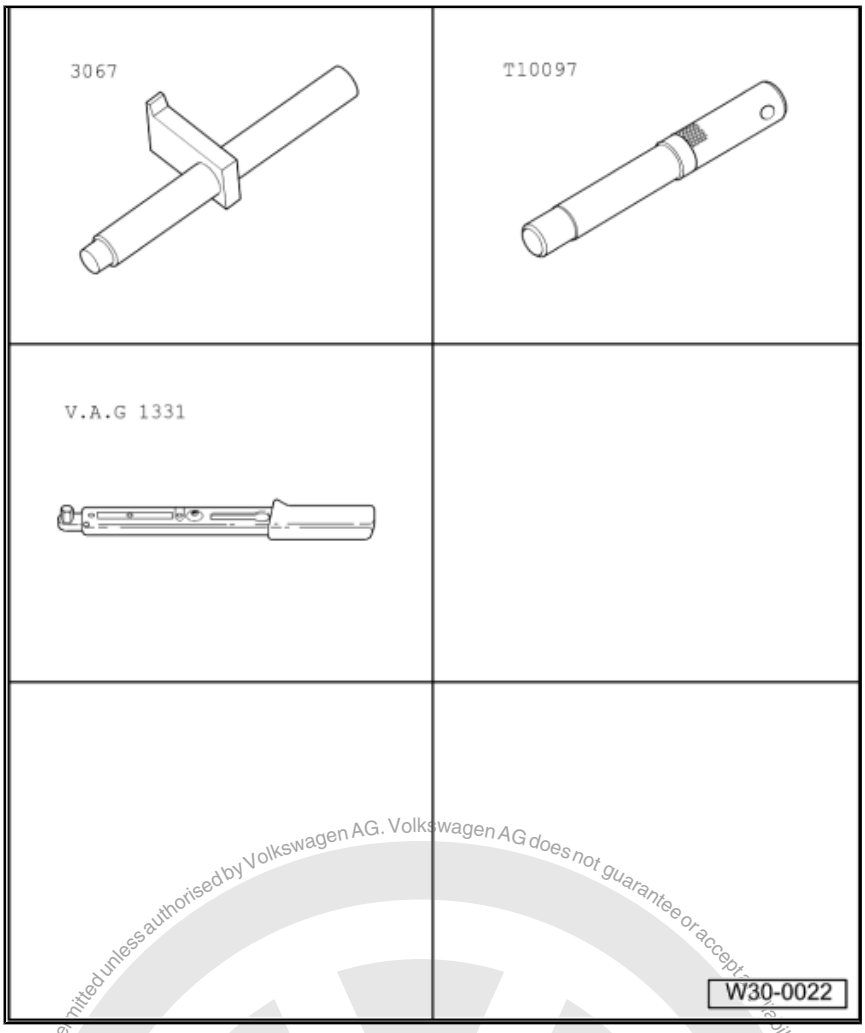

- For engines having a crankshaft of smaller diameter or having needle bearings in the crankshaft - ⇒ page 58 centring mandrel -3176-

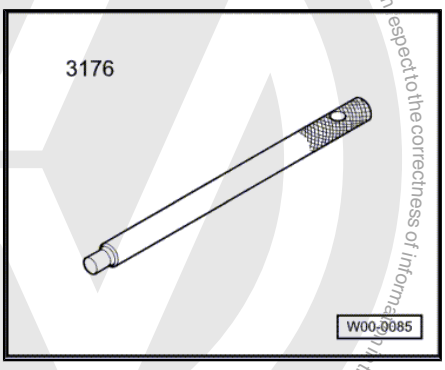

Protected by copyright. Copying for private or commercial purposes, in part or in whole, is not permitted unless authorised by Volkswagen AG. Volkswagen AG does not guarantee or accept any liability with respect to the correctness of information in this document. Copyright by Volkswagen AG.

Downloaded from www.Manualslib.com manuals search engine

5.1 Repairing clutch

Note

- *Check whether dowel sleeves for aligning engine and gearbox are fitted in cylinder block and install if necessary.*
- *If dowel sleeves are not fitted, difficulties shifting gears, clutch problems and possible noises from the gearbox (rattling of gears which are not engaged) could occur.*

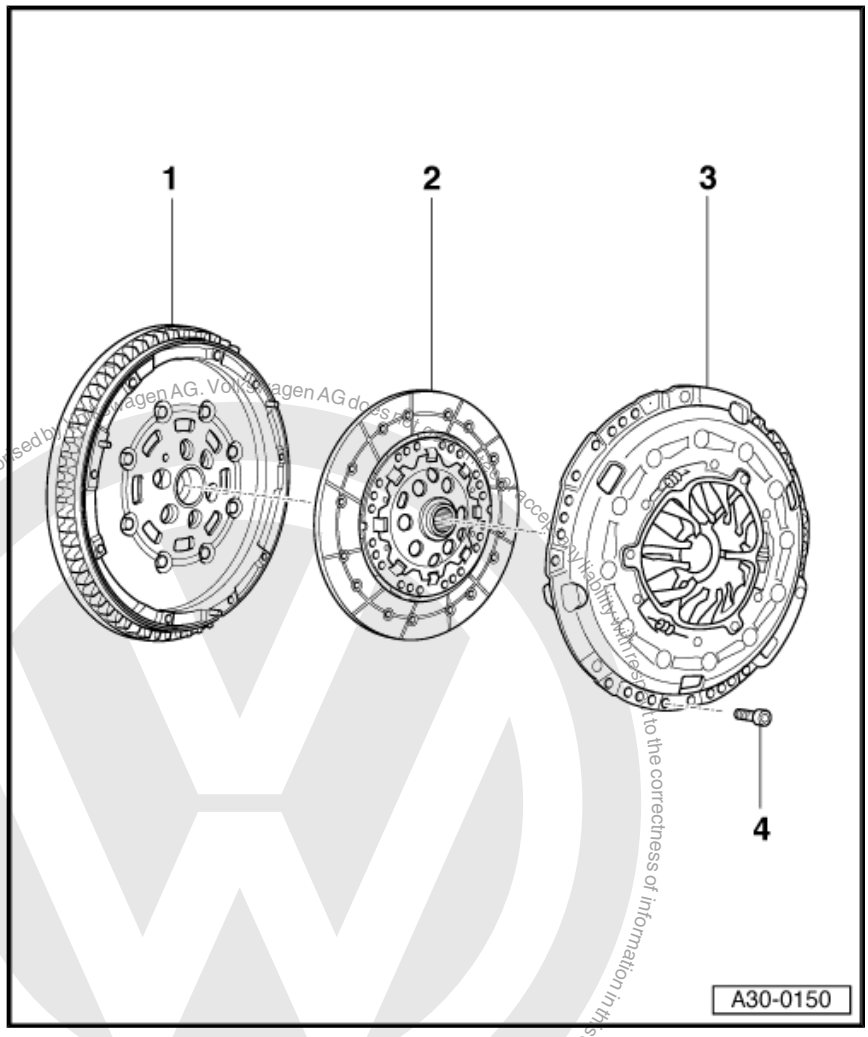

1 - Dual-mass flywheel

- ❑ Removing and installing ⇒ Rep. gr. 13
- ❑ Ensure that centring pins fit tightly
- ❑ Contact surface for clutch lining must be free of grooves, oil and grease

2 - Clutch plate

- ❑ Allocation ⇒ Electronic parts catalogue „ETKA“
- ❑ Removing and installing ⇒ page 55
- ❑ Renew only together with SAC pressure plate.
- ❑ Installation position: ⇒ page 56 .

3 - SAC pressure plate

- ❑ SAC means „self-adjusting clutch“.
- ❑ Renew only together with clutch plate.
- ❑ Allocation ⇒ Electronic parts catalogue „ETKA“
- ❑ Removing and installing ⇒ page 55
- ❑ Check ends of diaphragm spring ⇒ page 56
- ❑ Checking spring connections and riveted connections ⇒ page 56

4 - M6 bolt, 13 Nm, M7 bolt, 20 Nm

- ❑ Loosen or tighten diagonally in small steps

5.2 Removing and installing clutch

Removing

– Remove gearbox ⇒ page 85 .

– Use counterhold -3067- to loosen bolts.

– Loosen bolts in small steps and diagonally.

Downloaded from www.Manualslib.com manuals search engine

– Remove pressure plate and clutch plate.

Installing

Install in the reverse order of removal, observing the following:

Protected by copyright. Copying for private or commercial purposes, in part or in whole, is not permitted unless authorised by Volkswagen AG. Volkswagen AG does not guarantee the correctness of information in this copy.

Note

- *Select clutch plate and pressure plate according to engine code and ⇒ Electronic parts catalogue „ETKA“.*
- *Check whether dowel sleeves for aligning engine and gearbox are fitted in cylinder block and install if necessary.*
- *If dowel sleeves are not fitted, difficulties shifting gears, clutch problems and possible noises from the gearbox (rattling of gears which are not engaged) could occur.*

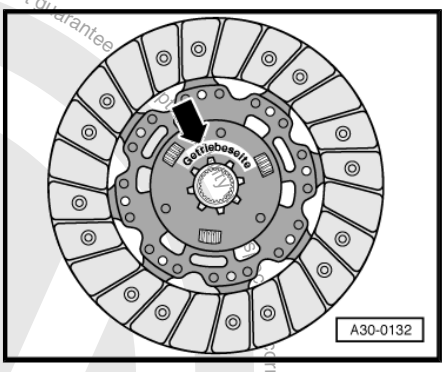

Installation position of clutch plate

- Lettering „Getriebeseite“ -arrow- faces gearbox.

Checking ends of diaphragm spring

- Wear to half the thickness of the diaphragm spring -arrows- is permitted.

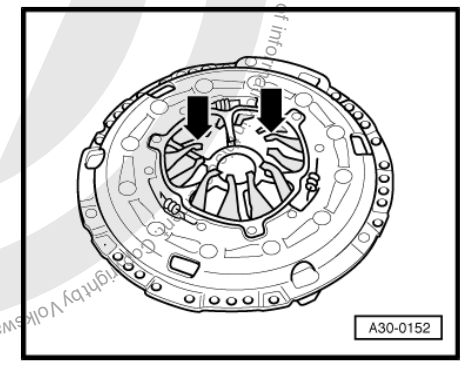

Checking spring connections and riveted connections

– Check spring connections -arrows A- for damage and riveted connections -arrows B- for secure seating.

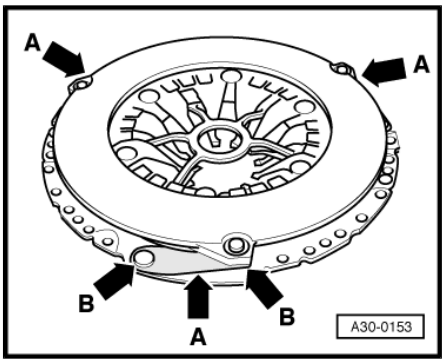

Downloaded from www.Manualslib.com manuals search engine

Checking position of adjusting mechanism with new pressure plates only

- Both edges -A- of the adjuster ring must be located between the two notches -arrows B-.
- If the adjuster ring takes up a different position in new pressure plates, the pressure plate and clutch plate are not allowed to be installed.
- The adjuster ring may take up a position outside the notches in used clutches.

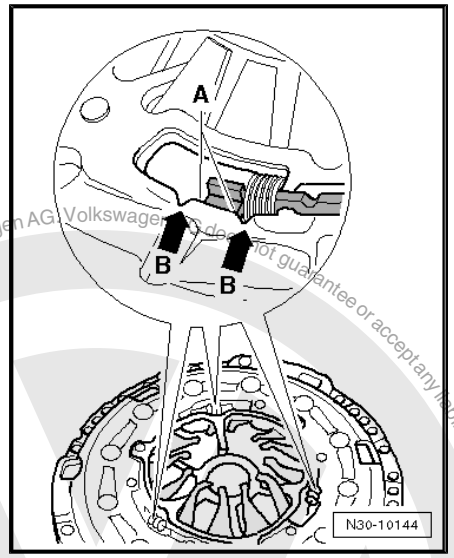

Note

- *Renew clutch plates and pressure plates with damaged or loose rivet connections.*
- *Always renew pressure plate and clutch plate together.*
- *Select clutch plate and pressure plate according to engine code and ⇒ Electronic parts catalogue „ETKA“.*
- *If clutch has burnt out, thoroughly clean clutch housing, flywheel and parts of engine facing gearbox to reduce smell of burnt linings.*
- *Clean input shaft splines and, on used clutch plates, clean hub splines; remove corrosion and apply only a very thin coat of clutch plate spline grease -G 000 100- to splines. Then move clutch plate to and fro on input shaft until hub moves freely on shaft. Remove excessive grease.*
- *Pressure plates are protected against corrosion and greased. Clean contact surface only. Otherwise, the service life of the clutch will be considerably reduced.*
- *Pressure plate contact surface and clutch plate lining must make full contact with flywheel. Only then insert securing bolts.*

– Reverse counterhold tool -3067- for installation.

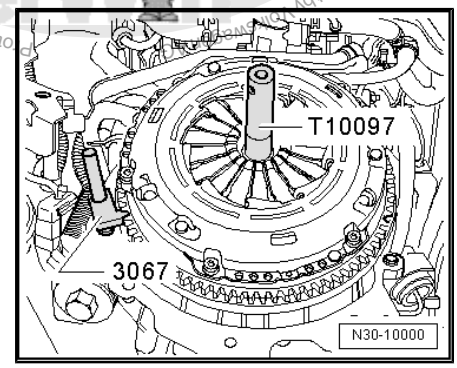

For engines having a crankshaft of smaller diameter -arrow- or having an needle bearing -arrow- in the crankshaft

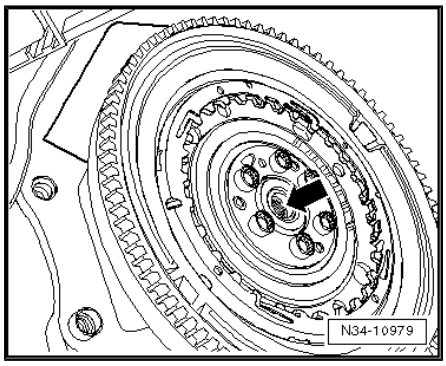

Protected by copyright. Copyright by Volkswagen AG. Volkswagen AG does not guarantee or accept any liability with respect to the correctness of information in this document. Copyright by Volkswagen AG. Volkswagen AG does not permit unless authorised by Volkswagen AG, in any form or in whole or in part, commercial or non-commercial purposes.

Downloaded from www.Manualslib.com manuals search engine

Centring clutch disc and removing and installing pressure plate for engines having a crankshaft of smaller diameter or having a needle bearing -arrow- in the crankshaft

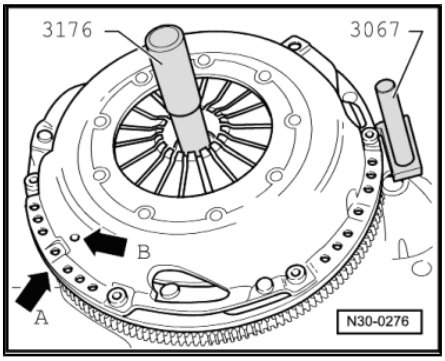

Note

Disregard arrows -A- and -B-.

Continuation for all

- Push pressure plate onto centralizing pins.
- Tighten all bolts evenly by hand until bolt heads contact pressure plate.
- Tighten bolts in small steps diagonally in order not to damage centring holes of pressure plate and centring pins of dual-mass flywheel ⇒ Item 4 (page 55) .
- Install gearbox ⇒ page 85 .

Protected by copyright. Copying for private or commercial purposes, in part or in whole, is not permitted unless authorised by Volkswagen AG. Volkswagen AG does not guarantee or accept any liability with respect to the correctness of information in this document. Copyright by Volkswagen AG.

Downloaded from www.Manualslib.com manuals search engine

34 – Controls, housing

1 Repairing selector mechanism

1.1 Installation position of selector mechanism

Arrow -A- Gear selection movement

Arrow -B- Gate selection movement

A - Gear selector cable

B - Gate selector cable

C - Heat shield

- ❑ Remove before removing selector mechanism.

1 - Gearbox selector lever

2 - Relay lever

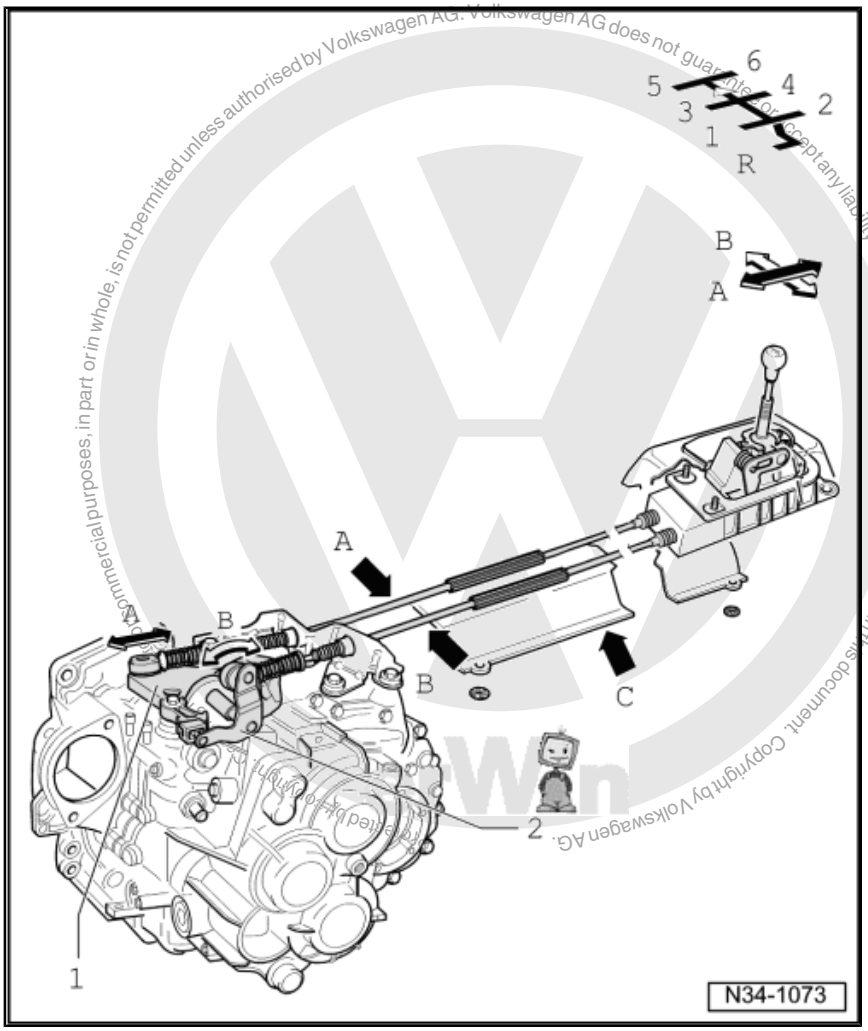

Downloaded from www.Manualslib.com manuals search engine

1.2 Overview of selector mechanism

Note

- *Note radio code for vehicles with coded radio.*
- *Before working on selector mechanism in engine compartment, disconnect earth strap from battery ⇒ Electrical system; Rep. gr. 27 ; Disconnecting and connecting battery .*
- *When reconnecting battery, perform work required after connecting battery ⇒ Electrical system; Rep. gr. 27 ; Disconnecting and connecting battery .*
- *To work on selector mechanism in engine compartment, remove complete air filter housing if it is located over selector mechanism ⇒ Rep. gr. 23 ; Repairing diesel direct injection system or ⇒ Rep. gr. 24 ; Repairing injection system .*
- *Remove selector mechanism to renew selector cables ⇒ page 78 .*
- *Do not kink selector cables.*

Protected by copyright. Copying for private or commercial purposes, in part or in whole, is not permitted unless authorised by Volkswagen AG. Volkswagen AG does not guarantee or accept any liability with respect to the correctness of information in this document. Copyright by Volkswagen AG.

I - Removing and installing gear knob and frame ⇒ page 62

II - Repairing gear lever and selector housing (through 10.06) ⇒ page 64

II - Repairing gear lever and selector housing (from 11.06) ⇒ page 66

III - Assembly overview - removing and installing selector cables ⇒ page 71

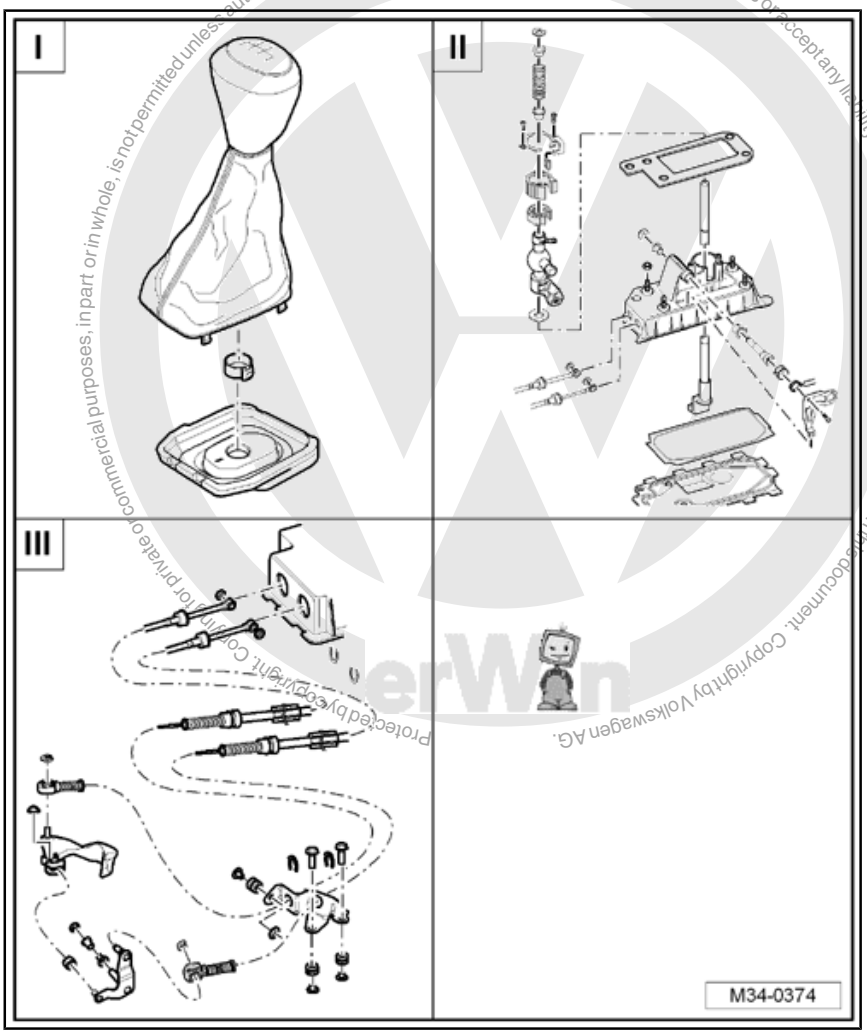

Removing and installing selector mechanism ⇒ page 78

Adjust selector mechanism ⇒ page 82 .

Special tools and workshop equipment required

Downloaded from www.Manualslib.com manuals search engine

- Hose clip pliers -V.A.G 1275-

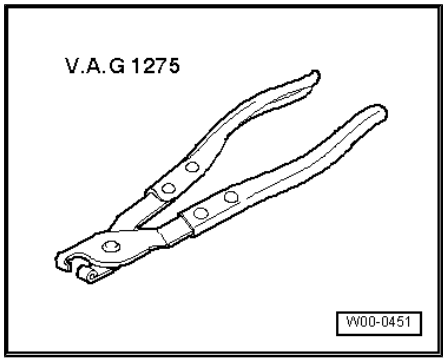

- Torque wrench -V.A.G 1331-

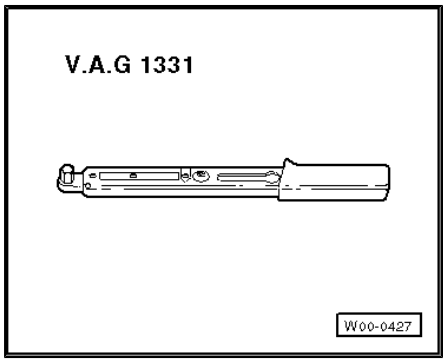

Protected by copyright. Copying for private or commercial purposes, in part or in whole, is not permitted unless authorised by Volkswagen AG. Volkswagen AG does not guarantee or accept any liability with respect to the correctness of information in this document. Copyright by Volkswagen AG.

Downloaded from www.Manualslib.com manuals search engine

1.3 Removing and installing gear knob and frame

1 - Emblem

- ❑ Can be carefully levered off gear knob of plastic or leather

2 - Gear knob

- ❑ With gaiter
- ❑ Gear knob and gaiter cannot be separated from one another
- ❑ Always renew together
- ❑ Removing and installing ⇒ page 62

3 - Clamp

- ❑ For securing gear knob to gear lever
- ❑ Secure to gear knob ⇒ Item 2 (page 62) using hose clip pliers -V.A.G 1275-
- ❑ Always renew

4 - Frame for centre console

- ❑ In some equipment versions, forms one part together with centre console

5 - Noise insulation

- ❑ Not fitted in all vehicles
- ❑ Arrow on noise insulation points in direction of travel
- ❑ Locking lugs are arranged at varying intervals
- ❑ Therefore it can be installed in only one position

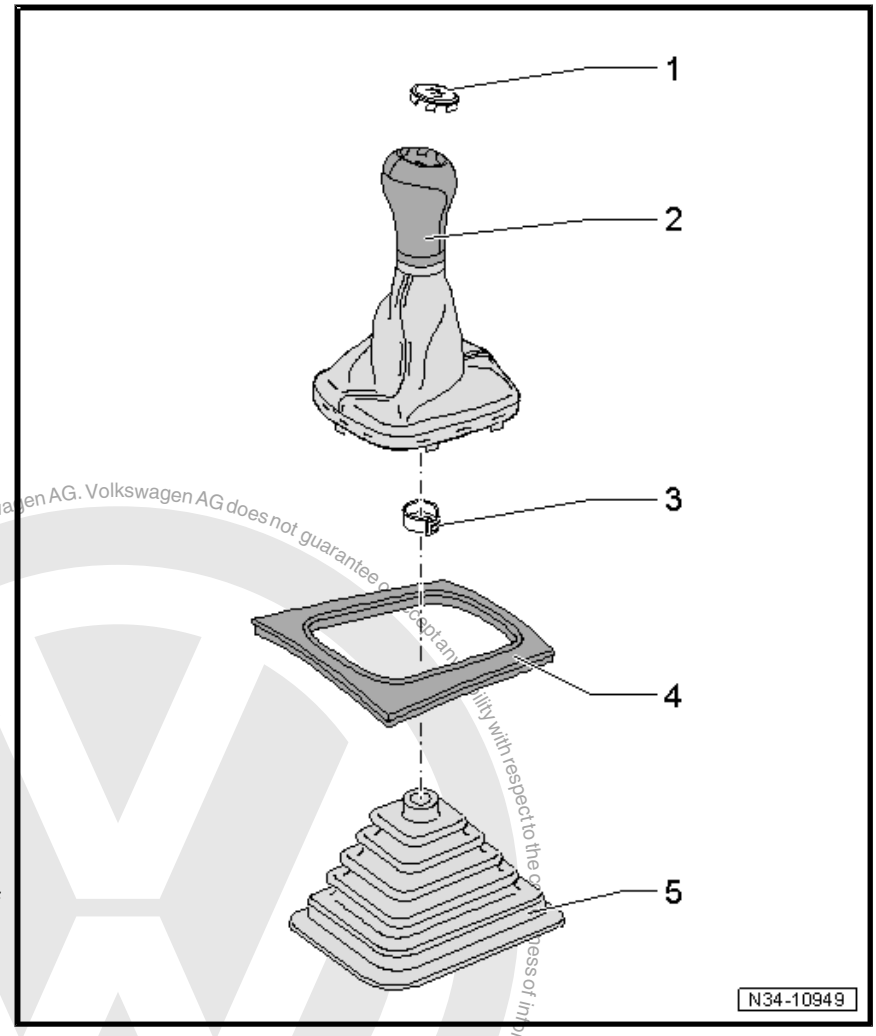

1.4 Removing and installing gaiter with gear knob and noise insulation

1.4.1 Removing

– Pull or carefully prise gaiter with frame for centre console upwards out of centre console -arrows-.

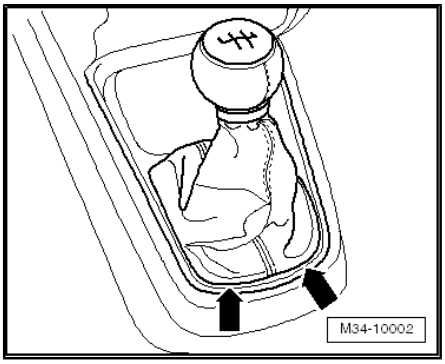

Note

With some equipment variations, the gaiter must be levered off along the front section.

Downloaded from www.Manualslib.com manuals search engine

– Pull gaiter with frame for centre console upwards, inside out over gear knob.

– Open clamp -arrow- and pull off gear knob together with gaiter.

In some versions, the centre console frame remains in the centre console.

– If necessary pull off, or carefully lever off, centre console frame.

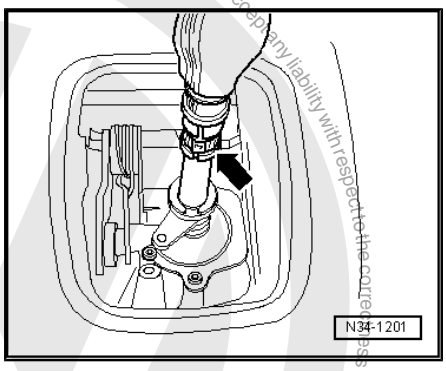

– Pull off noise insulation -1-.

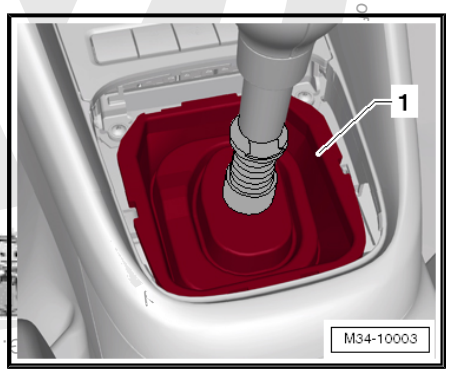

1.4.2 Installing

– First set noise insulation in place.

Installation position of noise insulation

- -Arrow A- points in direction of travel.
- Catches -arrows B- must engage in centre console.

– If necessary, press frame into centre console.

– Then turn gaiter inside out.

The gear knob must be pressed to stop.

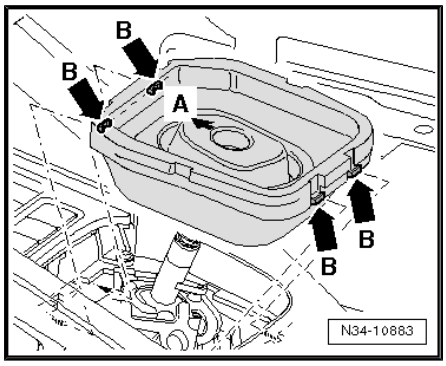

– Install gear knob with frame and gaiter and squeeze new clamp -arrow- together.

– Then press gaiter with frame into centre console or gaiter into frame.

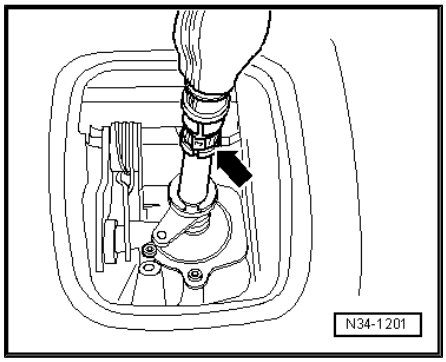

Downloaded from www.Manualslib.com manuals search engine

1.5 Repairing gear lever and selector housing (through 10.06)

Note

Lubricate bearing points and sliding surfaces with grease -G 000 450 02- .

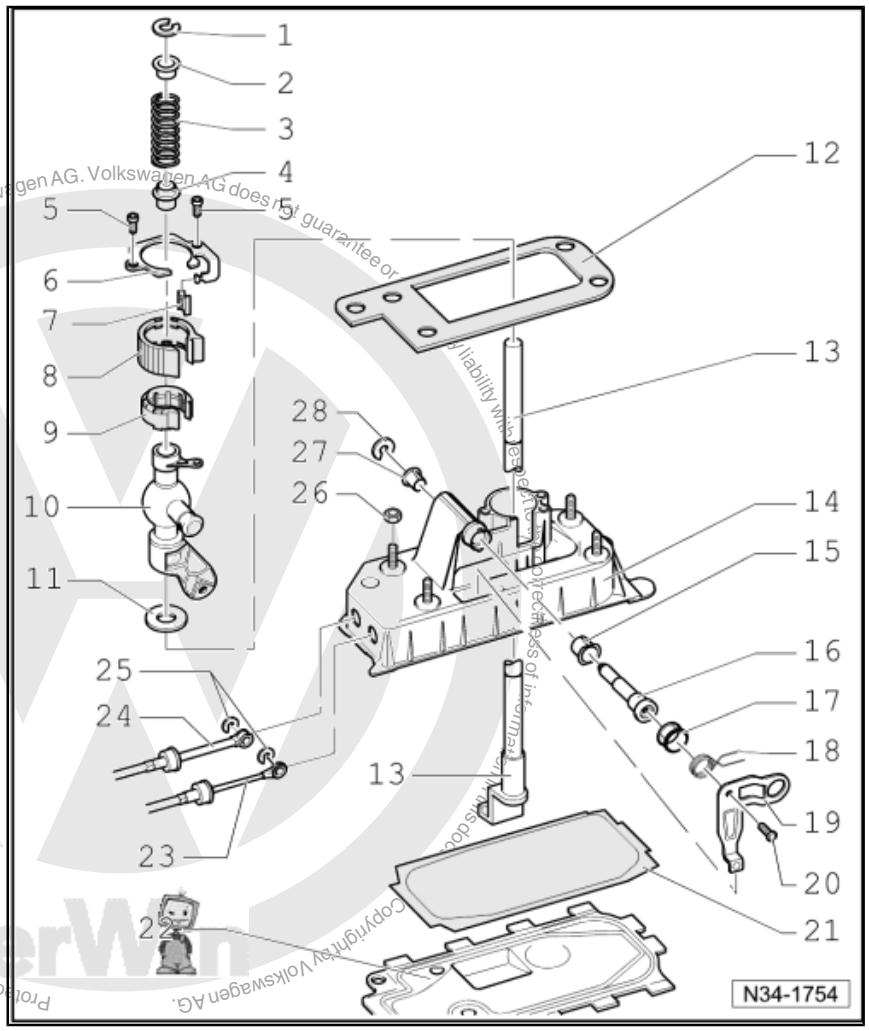

1 - Lock washer
- ❑ Removing and installing ⇒ page 65

2 - Bush

3 - Compression spring

4 - Bush

5 - Torx screw, 5 Nm

6 - Cover

7 - Damping

8 - Damping

9 - Ball socket

10 - Gear lever guide

11 - Damping washer

12 - Seal
- ❑ Between selector housing and underbody
- ❑ Self-adhesive
- ❑ Bond to selector housing

13 - Selector lever

14 - Selector housing

15 - Bearing bush

16 - Pivot pin

17 - Guide bush

18 - Compression spring
- ❑ Installing ⇒ page 65

19 - Gate selector lever

20 - Torx screw, 5 Nm

21 - Seal
- ❑ Always renew

22 - Base plate
- ❑ Bend open tabs to remove
- ❑ Always renew

23 - Gate selector cable
- ❑ On gate selector lever
- ❑ Removing and installing ⇒ page 65

24 - Gear selector cable
- ❑ Removing from and attaching to gear lever guide ⇒ page 65

Protected by copyright. Copying for private or commercial purposes, in part or in whole, is not permitted unless authorised by Volkswagen AG. Volkswagen AG does not guarantee or accept any liability with respect to the correctness of information in this document. Copyright by Volkswagen AG.

Downloaded from www.Manualslib.com manuals search engine

25 - Lock washer

- ❑ Always renew

26 - Hexagon nut

- ❑ M8: 25 Nm
- ❑ M6: 8 Nm
- ❑ Qty. 4

27 - Bearing bush

- ❑ Fits in one position only

28 - Lock washer

- ❑ Always renew

Protected by copyright. Copying for private or commercial purposes, in part or in whole, is not permitted unless authorised by Volkswagen AG. Volkswagen AG does not guarantee or accept any liability with respect to the correctness of information in this document. Copyright by Volkswagen AG.

Removing and installing gate and gear selector cables

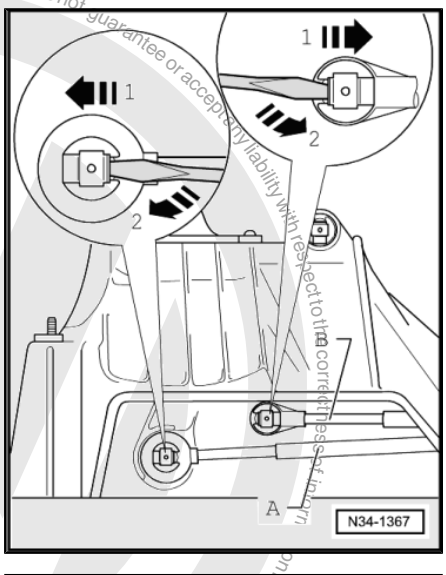

– Remove securing clip from gear selector cable -A- and gate selector cable -B-.

To do this, raise tab using screwdriver -arrow 1- and press off securing clip -arrow 2-.

– Remove gear selector cable -A- from gear lever retainer.

– Remove gate selector cable -B- from retainer of gate selector lever.

Removing and installing securing clip

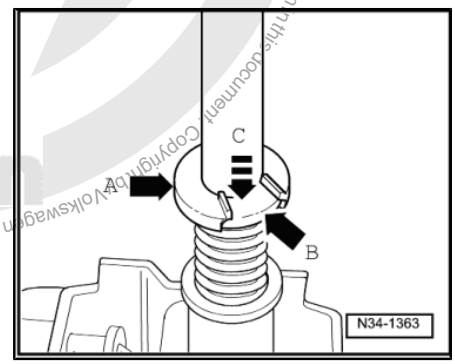

– To remove or install securing clip -arrow A-, press spacer bush -arrow B- to stop -in direction of arrow C- using screwdriver and pull off securing clip.

Note

- ♦ *Do not cant spacer bush when pushing down.*
- ♦ *Slot in gear lever for securing clip must be visible.*
- ♦ *Carefully release tension from spring.*

Installing compression spring

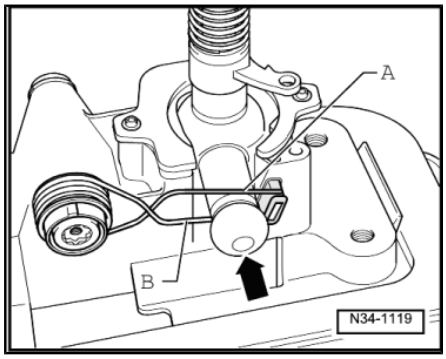

– Insert compression spring so that extension -A- lies on top of pin -arrow-.

– Then pull extension -B- down so that it sits below pin -arrow-.

Downloaded from www.Manualslib.com manuals search engine

1.6 Repairing gear lever and selector housing (from 11.06)

Note

- *Lubricate bearing points and sliding surfaces with grease -G 000 450 02- .*
- *Dismantling and assembling selector mechanism ⇒ page 67 .*

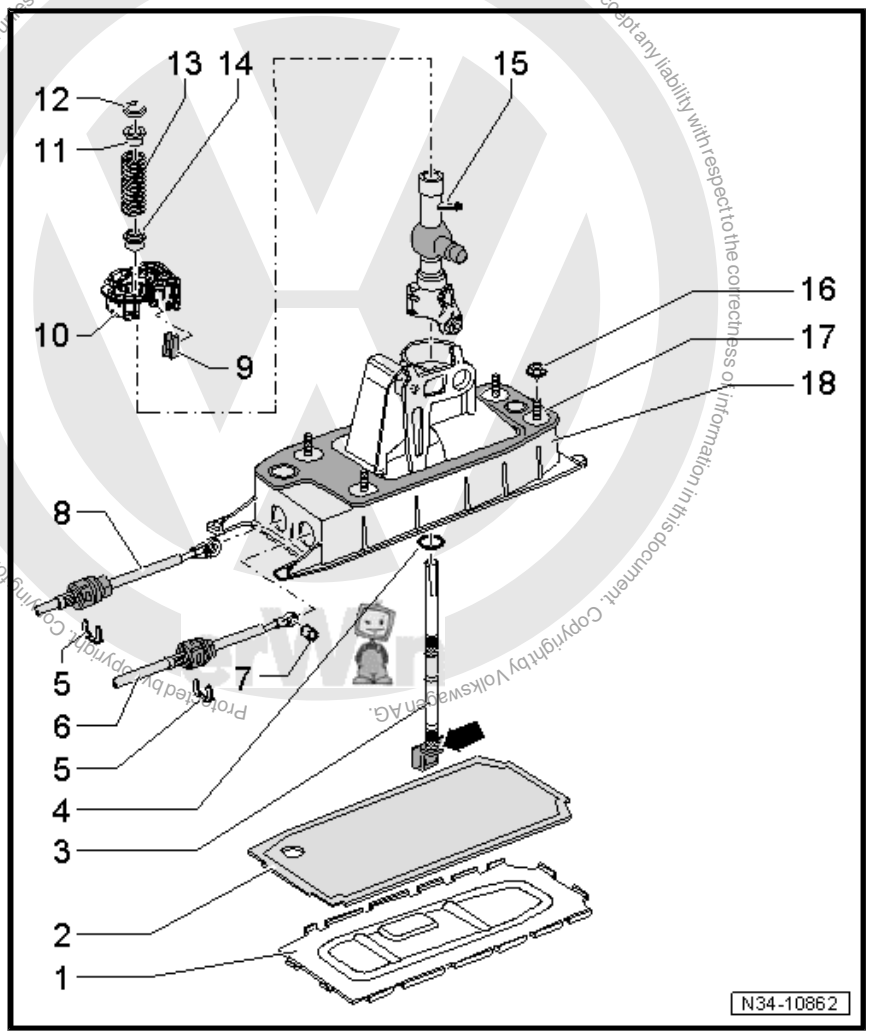

1 - Base plate
- ❑ Bend open tabs to remove
- ❑ Always renew

2 - Seal
- ❑ Always renew

3 - Selector lever
- ❑ Can be removed and installed with gear lever guide ⇒ Item 15 (page 67) installed

4 - Damping washer
- ❑ Push onto gear lever up to stop -arrow-

5 - Securing clip
- ❑ Do not damage cables when removing
- ❑ Always renew

6 - Gate selector cable
- ❑ Lever off gate selector lever
- ❑ Press onto gate selector lever inside selector mechanism
- ❑ Installation position ⇒ page 59

7 - Bush

8 - Gear selector cable
- ❑ Lever off gear lever guide
- ❑ Press onto gear lever guide inside selector mechanism
- ❑ Installation position ⇒ page 59

9 - Damping

10 - Ball socket
- ❑ Will be damaged when removed
- ❑ Always renew

11 - Bush

12 - Lock washer
- ❑ Removing and installing ⇒ page 65

13 - Compression spring
- ❑ Removing and installing ⇒ page 65

Protected by copyright. Copying for private or commercial purposes, in part or in whole, is not permitted unless authorised by Volkswagen AG. Volkswagen AG does not guarantee or accept any liability with respect to the correctness of information in this document. Copyright by Volkswagen AG.

Downloaded from www.Manualslib.com manuals search engine

Protected by copyright. Copying for private or commercial purposes, in part or in whole, is not permitted unless authorised by Volkswagen AG. Volkswagen AG does not guarantee or accept any liability with respect to the correctness of information in this document. Copyright by Volkswagen AG.

14 - Bush

15 - Gear lever guide

16 - Hexagon nut

- ❑ M8: 25 Nm
- ❑ M6: 8 Nm
- ❑ Qty. 4

17 - Seal

- ❑ Between selector housing and underbody
- ❑ Self-adhesive
- ❑ Bond to selector housing

18 - Selector lever housing

- ❑ With compression spring and gate selector lever
- ❑ Compression spring and gate selector lever cannot be removed

1.6.1 Dismantling and assembling selector mechanism

Special tools and workshop equipment required

♦

thrust piece -T10083-

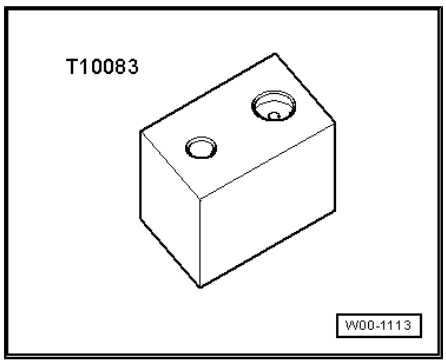

Dismantling

– Remove selector mechanism ⇒ page 78 .

– Bend open tabs -arrows- of base plate for selector mechanism using screwdriver and remove base plate; (tabs in front area of base plate are not illustrated).

– Remove seal from selector housing.

– Remove gear and gate selector cables from selector housing ⇒ page 71 .

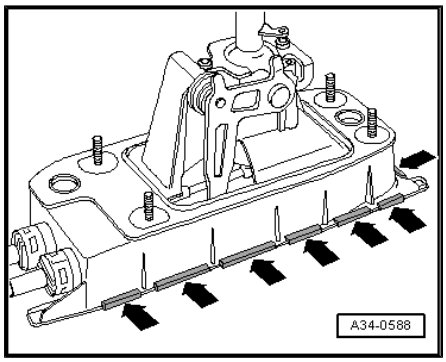

Downloaded from www.Manualslib.com manuals search engine

– Lift upper end -A- of compression spring over tab of gate selector lever.

– Use screwdriver to press catches -arrows- of ball socket towards bearing ball of gear lever guide; break off catches if necessary.

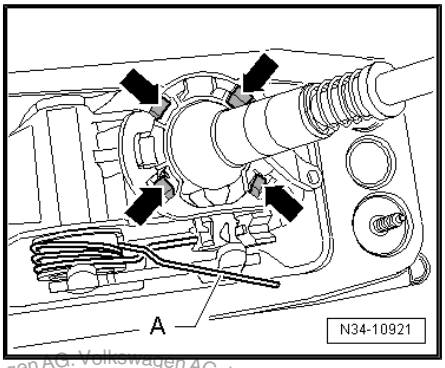

– Lever ball socket -A- with gear lever guide -B- out of selector housing.

– Then press ball socket off bearing ball of gear lever guide and remove it.

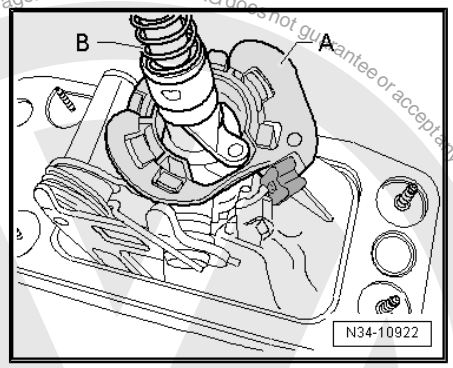

• Please pay attention to guides -A- during the further procedure.

• They must not be broken off.

– Lever lower end -arrow 1- of compression spring onto shoulder on gate selector lever as far as stop.

– Now pull gear lever guide up to stop and pull ball stud out of gate selector lever -arrow 2-.

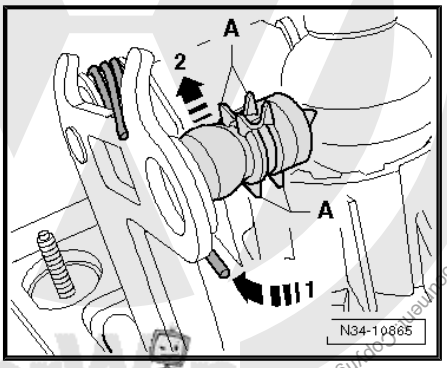

– Then turn gear lever guide in -direction of arrow 1-.

• Pin -arrow 2- must be in notch in selector housing.

– Then swing out gear lever guide with gear lever in -direction of arrow 3-.

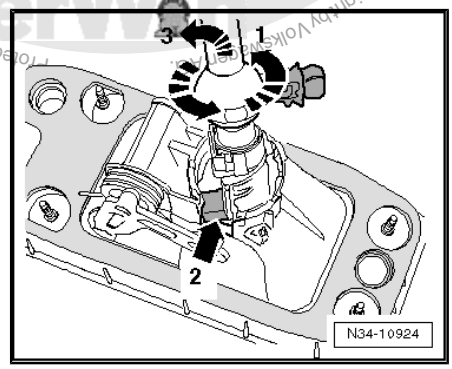

Assembling

> **Caution**
>
> *The lower end of the compression spring (-arrow 1- ⇒ figure above) can snap off the shoulder of the gate selector lever out of control during the further procedure.*

– Therefore, carefully press it down off shoulder of gate selector lever.

The ends of the compression spring then become tensioned „diagonally“ with a loud noise.

Protected by copyright. Copying for private or commercial purposes, part or in whole, is not permitted unless authorised by Volkswagen AG. Volkswagen AG does not guarantee or accept any liability with respect to the correctness of information in this document. Copyright by Volkswagen AG.

Downloaded from www.Manualslib.com manuals search engine

– Slacken ends -A- and -B- by turning both round to right.
• Ends -A- and -B- must point in opposite directions.

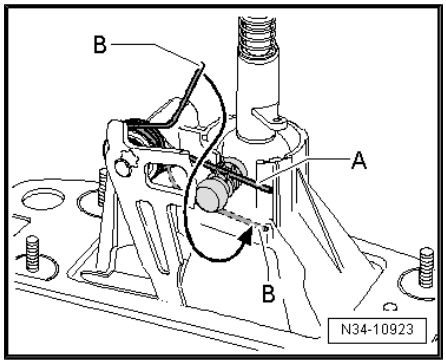

– Fit gear lever guide with gear lever in selector housing.
• Pin -arrow 1- is still located in notch in selector housing.
– Turn gear lever guide in -direction of arrow 2- until ball stud -A- is located in notch in selector housing.

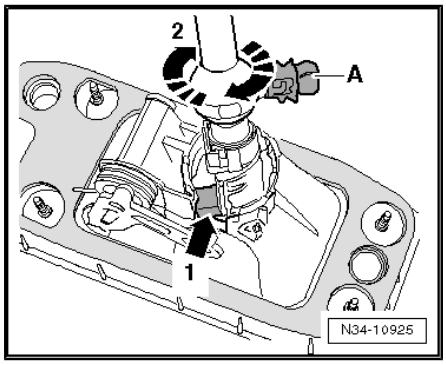

– Place selector housing with gear lever guide into larger recess -arrow- in thrust piece -T10083- .

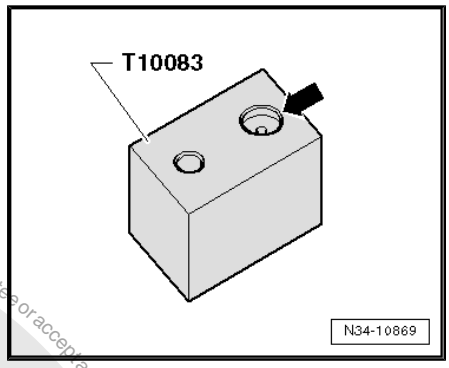

Note

To ensure that the selector housing with gear lever guide can be inserted in the thrust piece , first remove gear lever, if necessary.

• The gear lever guide must project from the selector housing up to the stop.

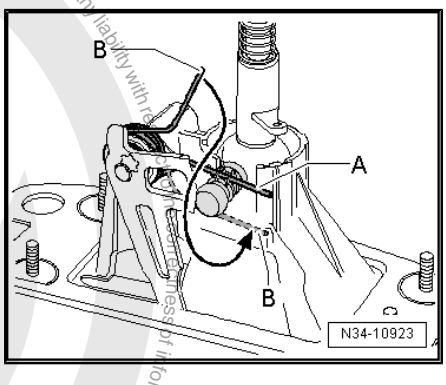

Note

For clarity of illustration, only part of the gate selector lever is shown.

– Insert end -A- of compression spring into guide from above.
– Pull end -B- of compression spring downwards and insert it next to guide (in direction of ball joint).
• Please pay attention to guides (⇒ figure above) during the further procedure.
• They must not be broken off.
– Carefully remove selector housing with gear lever guide from thrust piece -T10083- .

Protected by copyright. Copying for private or commercial purposes, in part or in whole, is not permitted unless authorised by Volkswagen AG. Volkswagen AG does not guarantee or accept any liability with respect to the correctness of information in this document. Copyright by Volkswagen AG.

Downloaded from www.Manualslib.com manuals search engine

– Move gate selector lever back to stop (opposite from mounting holes for gear and gate selector cable) -arrow 1-.

– Grease ball stud.

– Press ball stud into gate selector lever -arrow 2-.

• Guides -A- and tabs -B- are not allowed to be damaged.

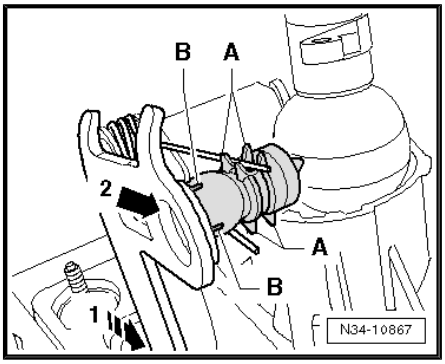

– Place selector housing with gear lever guide into larger recess -arrow- in thrust piece -T10083- .

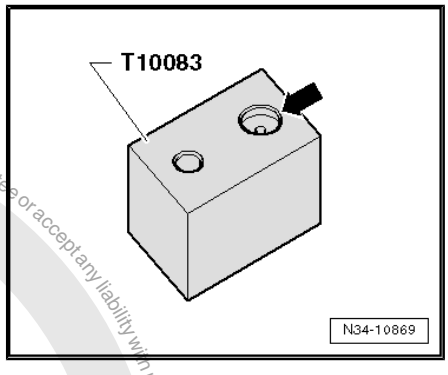

• The gear lever guide must project from the selector housing up to the stop.

– Lift upper end -A- of compression spring over pin of gate selector lever

• Use a new ball socket -B-.

– Grease ball socket and bearing ball of gear lever guide.

– Press ball socket onto bearing ball of gear lever guide up to stop.

– Remove selector housing from thrust piece -T10083- .

– Insert lower end -C- of compression spring into guide.

– Lift upper end -A- of compression spring over pin of gate selector lever into guide.

– Press ball socket into selector housing -arrows-.

• All locking lugs must clip in.

– Attach gear lever, gear selector cable, gate selector cable and base plate ⇒ page 66 .

– Install selector mechanism ⇒ page 78 .

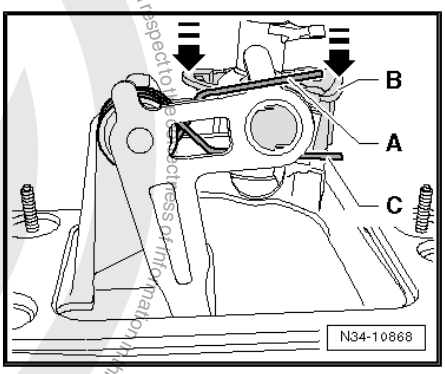

Protected by copyright. Copyright by Volkswagen AG. Volkswagen AG does not guarantee or accept any liability with respect to the correctness of information in this document. Copyright by Volkswagen AG. Copying for private or commercial purposes in part or in whole, is not permitted unless authorised by Volkswagen AG.

Downloaded from www.Manualslib.com manuals search engine

1.7 Assembly overview - removing and installing selector cables

Note

Lubricate bearing points and sliding surfaces with grease -G 000 450 02- .

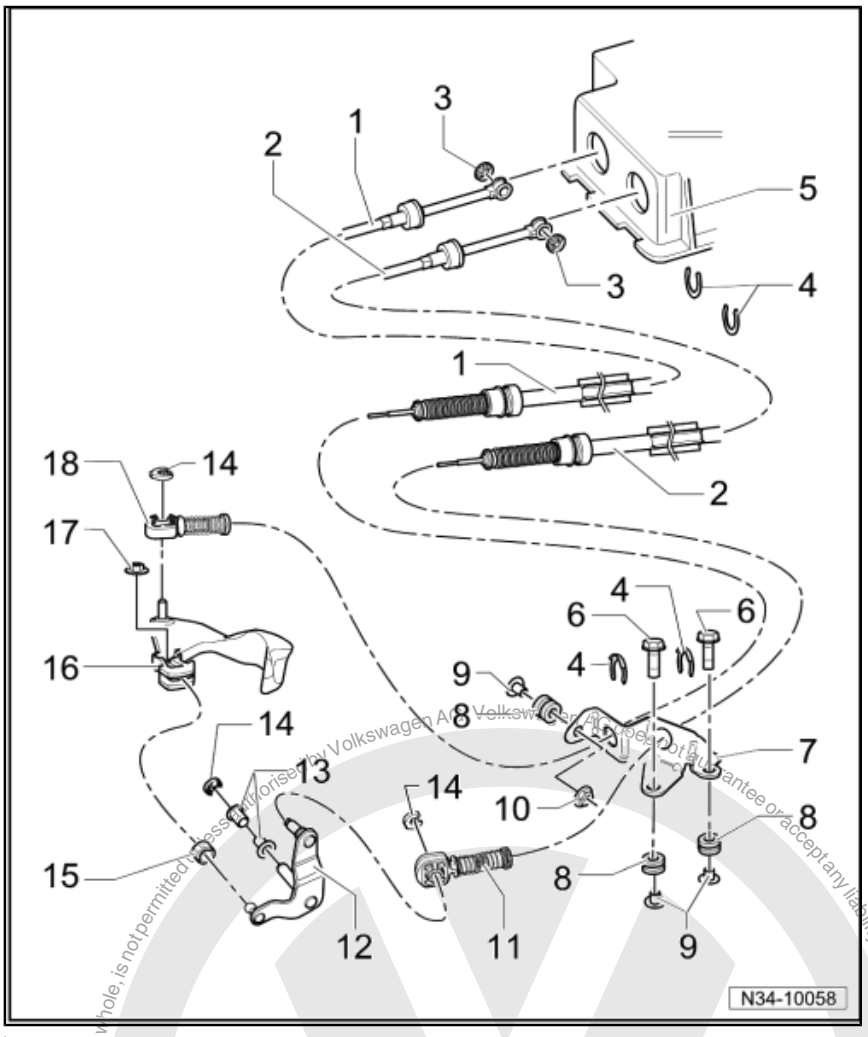

1 - Gear selector cable
- ❑ Connect to cable end-piece ⇒ Item 18 (page 72)
- ❑ Installation position ⇒ page 59
- ❑ From 11.06, modified attachment to gear lever inside selector mechanism ⇒ Item 8 (page 66)

2 - Gate selector cable
- ❑ Connect to cable end-piece ⇒ Item 11 (page 71)
- ❑ Installation position ⇒ page 59
- ❑ From 11.06, modified attachment to gate selector lever inside selector mechanism ⇒ Item 6 (page 66)

3 - Lock washer
- ❑ Always renew
- ❑ Discontinued in selector mechanisms from 11.06 ⇒ page 66

4 - Lock washer
- ❑ Do not damage cables when removing
- ❑ Always renew

5 - Selector housing

6 - Hexagon bolt, 20 Nm
- ❑ For cable support bracket
- ❑ Qty. 2

7 - Cable support bracket
- ❑ May be made from plastic or metal

8 - Grommet
- ❑ Cable support bracket mounting on gearbox

9 - Spacer

10 - Nut, 20 Nm
- ❑ For cable support bracket

11 - Cable end-piece
- ❑ For gate selector cable to relay lever
- ❑ After installing, adjust selector mechanism ⇒ page 82

Protected by copyright. Copying for private or commercial purposes, in part or in whole, is not permitted unless authorised by Volkswagen AG. Volkswagen AG does not guarantee or accept any liability with respect to the correctness of information in this document. Copyright by Volkswagen AG.

Downloaded from www.Manualslib.com manuals search engine

- ❑ Do not interchange; cable end-pieces for gate selector cable to relay lever and gear selector cable to gearbox selector lever are different ⇒ page 73
- ❑ From 05.07, fitted in conjunction with plastic relay lever ⇒ page 75
- ❑ Removing from plastic relay lever ⇒ page 75
- ❑ Pressing onto plastic relay lever ⇒ page 75
- ❑ Allocation ⇒ page 73

12 - Relay lever

- ❑ Installation position ⇒ page 74
- ❑ After installing, adjust selector mechanism ⇒ page 82
- ❑ May be made from plastic or metal
- ❑ Metal relay lever is mounted in bearing bush ⇒ Item 13 (page 72) and secured with securing clip ⇒ Item 14 (page 72)
- ❑ From 05.07, plastic relay lever
- ❑ Remove and install plastic relay lever together with cable end-piece ⇒ page 75
- ❑ Bearing bushes and securing clip not required for plastic relay lever

13 - Bearing bush

- ❑ Discontinued on relay levers made from plastic

14 - Lock washer

- ❑ Always renew
- ❑ Discontinued on relay levers made from plastic

15 - Shoe

16 - Gearbox selector lever

- ❑ With damper weight
- ❑ Install so that master spline aligns with selector shaft
- ❑ After installing, adjust selector mechanism ⇒ page 82
- ❑ Installation position ⇒ page 74
- ❑ From 06.06, smaller diameter of support pin for cable end-piece ⇒ page 73

17 - Hexagon nut, 23 Nm

- ❑ Self-locking
- ❑ Always renew

18 - Cable end-piece

- ❑ For gear selector cable to gearbox selector lever
- ❑ After installing, adjust selector mechanism ⇒ page 82
- ❑ Do not interchange; cable end-pieces for gate selector cable to relay lever and gear selector cable to gearbox selector lever are different ⇒ page 73

Protected by copyright. Copying for private or commercial purposes, in part or in whole, is not permitted unless authorised by Volkswagen AG. Volkswagen AG does not guarantee or accept any liability with respect to the correctness of information in this document. Copyright by Volkswagen AG.

Downloaded from www.Manualslib.com manuals search engine

Protected by copyright. Copyright by Volkswagen AG. Volkswagen AG does not guarantee or accept any liability with respect to the correctness of information in this document. Copyright by Volkswagen AG. Protected by copyright. Copying for private or commercial purposes, in part or in whole, is not permitted unless authorised by Volkswagen AG.

Allocation of cable end-pieces

The holes in the cable end-pieces have different diameters.

Cable end-piece for	Dimension „a“
1 - Gear selector cable to gearbox selector lever from 06.06	8.5 mm
2 - Gear selector cable to gearbox selector lever through 05.06	10 mm
2 - Gate selector cable to metal relay lever	8 mm
2 - Gate selector cable to plastic relay lever ⇒page 75	10 mm

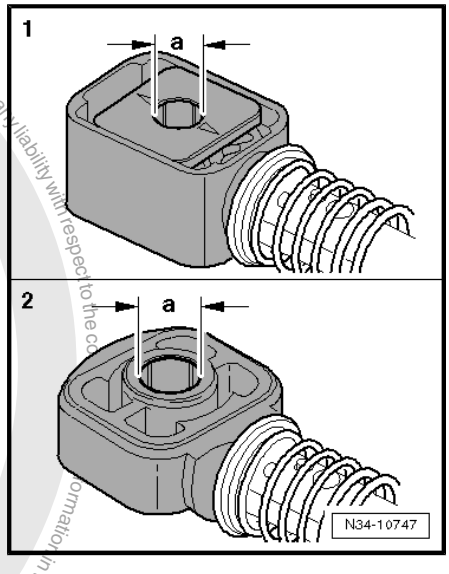

From 06.06, smaller diameter of support pin for gear selector cable end-piece

Support pin for gear selector cable end-piece	Dimension „a“
Through 05.06	10 mm
From 06.06	8.5 mm

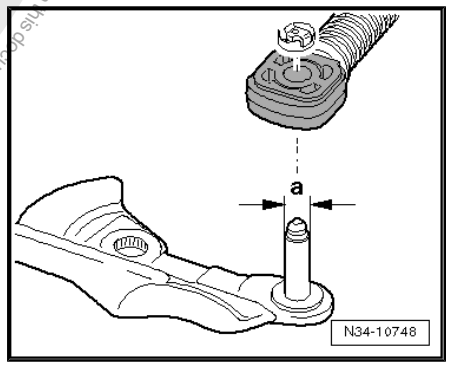

Install gearbox selector lever

– When fitting the gearbox selector lever, ensure that the gap -arrow A- is aligned with the master spline -arrow B-.

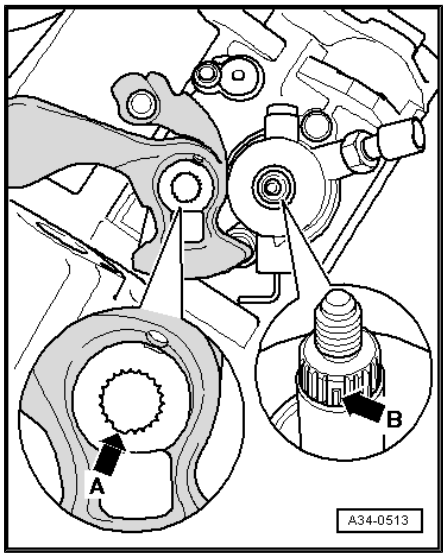

Downloaded from www.Manualslib.com manuals search engine

Installation position of gearbox selector lever and relay lever

1 - Gearbox selector lever with damper weight

2 - Relay lever engages in guide rail of gearbox selector lever via shoe -arrow-.

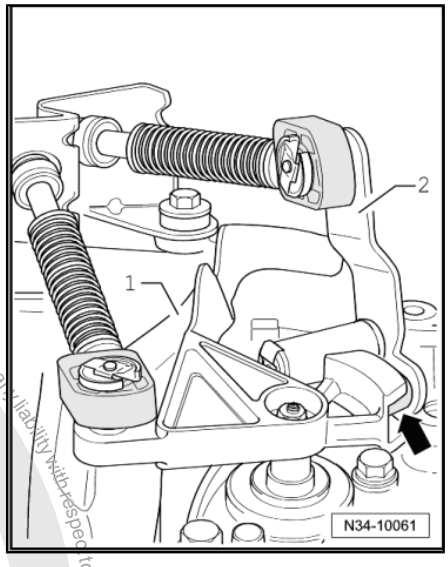

Renewing cable end-pieces

– Pull locking mechanisms of end-pieces of gate selector cable and gear selector cable forward to stop -arrow 1- and then turn to left to lock -arrow 2-.

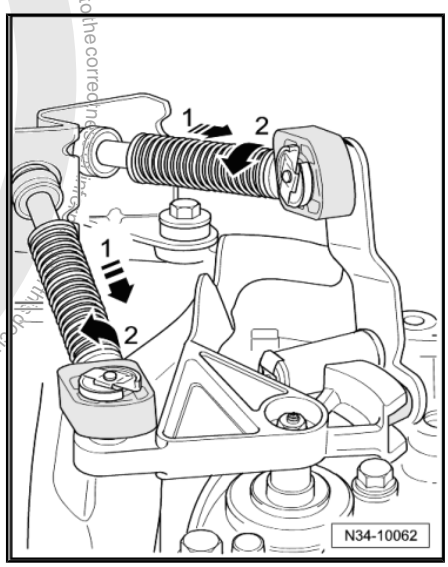

Protected by copyright. Copying for private or commercial purposes, in part or in whole, is not permitted unless authorised by Volkswagen AG. Volkswagen AG does not guarantee or accept any liability with respect to the correctness of information in this document. Copyright by Volkswagen AG.

Downloaded from www.Manualslib.com manuals search engine

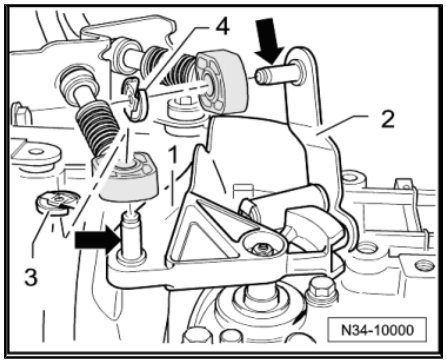

– Remove securing clip -3- for gear selector cable from gearbox selector lever -1-.

– Pull gear selector cable off pin -arrow-.

Metal relay lever

– Remove securing clip -4- for gate selector cable from relay lever -2-.

– Pull gate selector cable from pin.

Plastic relay lever

– Remove relay lever together with cable end-piece ⇒ page 75 .

– Carefully pry off cable end-piece ⇒ page 77 .

Continued for all selector mechanisms

– Spread a small quantity of grease -G 000 450 02- on pin -arrows- of gearbox selector lever -1- and, as needed, relay lever pin -2-.

– Renew securing clip -3- and, for metal relay lever, securing clip -4- each time they are removed.

– Secure gear selector cable with securing clip -3- and, for metal relay lever, gate selector cable with securing clip -4-.

Note

If a plastic relay lever is installed, it must be mounted together with the cable end-piece *⇒ page 75* *.*

– Adjust selector mechanism ⇒ page 82 .

1.8 Plastic relay lever

From 05.07, relay lever is made from plastic. 2 versions may be installed.

♦ Relay lever with catch or

♦ Relay lever with clip

Comply with the following during removal and installation work:

• To remove relay lever, first separate cable end-piece from gate selector cable.

This will avoid damage to the gate selector cable

– Pull locking mechanism forward to stop in -direction of arrow 1- and then lock by turning to left in -direction of arrow 2-.

– Then push relay lever forwards (-in direction of arrow 3-).

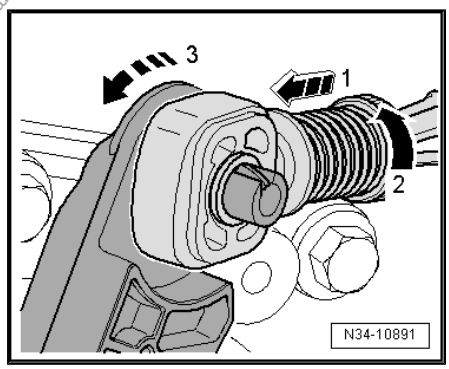

Volkswagen AG does not guarantee or accept any liability with respect to the correctness of information in this document. Copyright by Volkswagen AG.
Protected by copyright. Copying for private or commercial purposes, in part or in whole, is not permitted unless authorised by Volkswagen AG.

Downloaded from www.Manualslib.com manuals search engine

Relay lever with catch -arrow 1-

– Press catch -arrow 1- down to stop and remove relay lever together with cable end-piece. In the process, swing it in direction of operation.

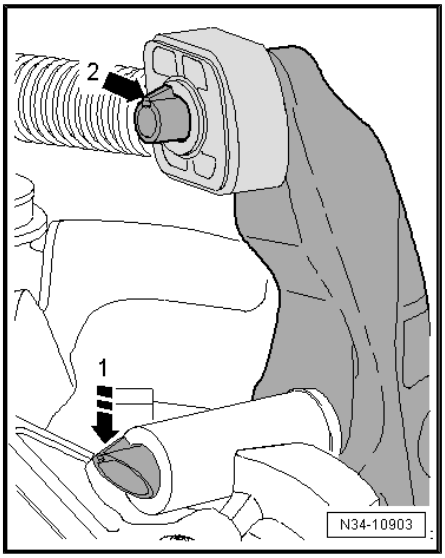

Relay lever with clip -arrow 1-

– Pull clip -arrow 1- off and remove relay lever together with cable end-piece.

Continuation for all

- Cable end-piece must be located behind catch -arrow 2-.
- The cable end-piece can be removed only with the relay lever removed ⇒ page 77 .

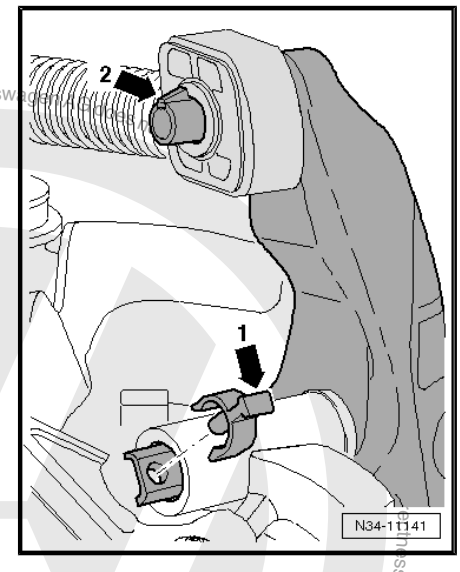

Note

To fit, lubricate bearing points and sliding surfaces with grease - G 000 450 02- .

– Press cable end-piece onto relay lever ⇒ page 77 .

– Install relay lever together with cable end-piece to stop.

Relay lever with catch -arrow 1-

- Catch -arrow 1- secures relay lever.
- Ensure proper engagement.
- Cable end-piece must be located behind catch -arrow 2-.

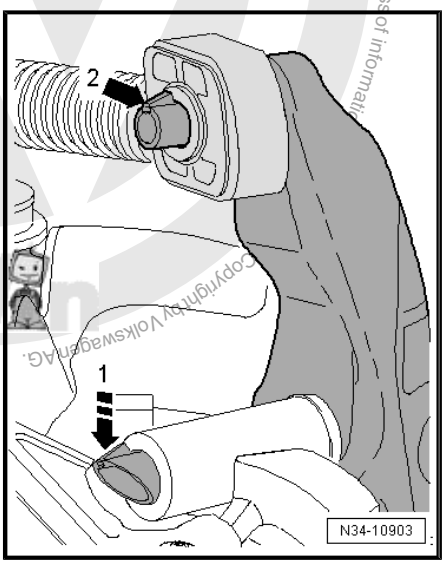

Protected by copyright. Copying for private or commercial purposes, in part or in whole, is not permitted unless authorised by Volkswagen AG. Volkswagen AG does not guarantee or accept any liability with respect to the correctness of information.
Copyright by Volkswagen AG.

Downloaded from www.Manualslib.com manuals search engine

Relay lever with clip -arrow 1-

- Clip -arrow 1- secures relay lever.
- Ensure proper engagement of clip.
- Cable end-piece must be located behind catch -arrow 2-.

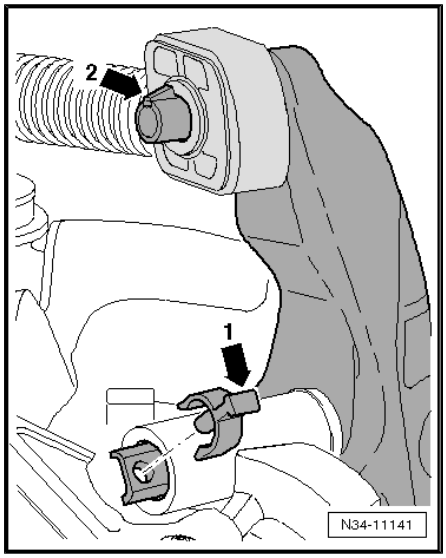

Levering gate selector cable end-piece off plastic relay lever

- Relay lever has been removed.

– Insert a flat-blade screwdriver -A- between bush -B- and relay lever.

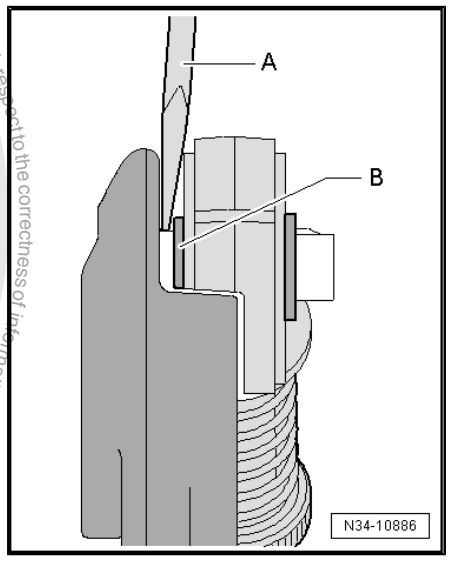

Pressing on cable end-piece

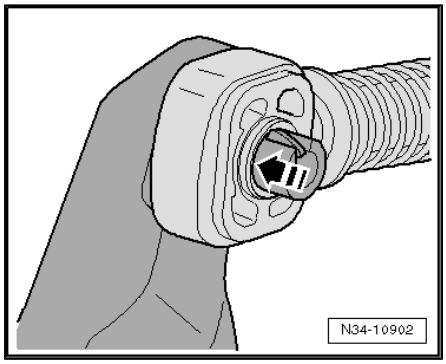

Protected by copyright. Copying for private or commercial purposes, in part or in whole, is not permitted unless authorised by Volkswagen AG. Volkswagen AG does not guarantee or accept any liability with respect to the correctness of information in this document. Copyright by Volkswagen AG.

Downloaded from www.Manualslib.com manuals search engine

Volkswagen AG. Volkswagen AG does not guarantee or accept any liability with respect to the correctness of information in this document. Copyright by Volkswagen AG. Protected by copyright. Copying for private or commercial purposes, in part or in whole, is not permitted unless authorised by Volkswagen AG.

- Relay lever has been removed.
- Cable end-piece may be pressed only onto bush -arrow-.
- Cable end-piece must move freely on relay lever.
- It must be located behind catch -arrow 2-.

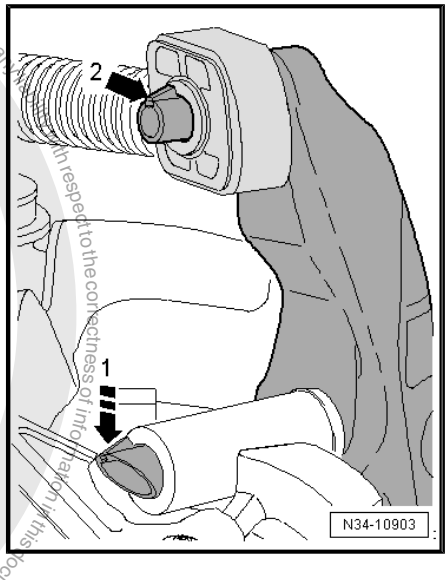

1.9 Removing and installing selector mechanism

Special tools and workshop equipment required

♦ Torque wrench -V.A.G 1331-

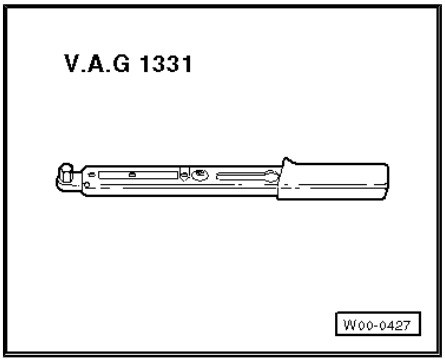

♦ Grease -G 000 450 02-

1.9.1 Removing

– First check whether a coded radio is fitted. In this case, obtain anti-theft code.

– With ignition switched off, disconnect battery ⇒ Electrical system; Rep. gr. 27 ; Disconnecting and connecting battery .

– Remove gaiter with selector knob and noise insulation ⇒ page 62 .

– Remove centre console and securing bracket for centre console ⇒ General body repairs, interior; Rep. gr. 68 ; Compartments, covers and trims .

Downloaded from www.Manualslib.com manuals search engine

– Remove selector housing nuts -arrows-.

– Remove complete air filter housing if it is over selector mechanism ⇒ Rep. gr. 23 ; Repairing diesel direct injection system or ⇒ Rep. gr. 24 ; Repairing injection system .

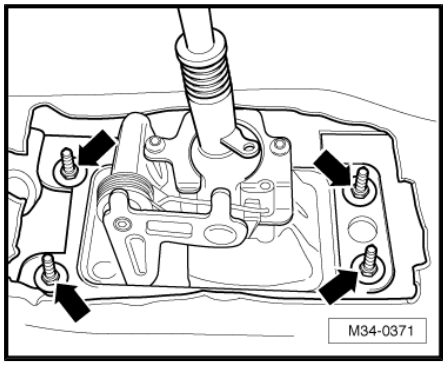

– Remove securing clip -3- for gear selector cable from gearbox selector lever -1-.

– Pull gear selector cable off pin -arrow-.

Metal relay lever

– Remove securing clip -4- for gate selector cable from relay lever -2-.

– Pull gate selector cable off pin -arrow-.

Plastic relay lever

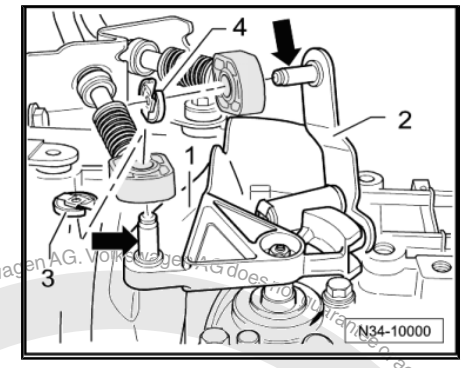

Releasing cable end-piece from gate selector cable

• To avoid damage to gate selector cable, separate cable end-piece from gate selector cable before removal.

– Pull locking mechanism forward to stop in -direction of arrow 1- and then lock by turning to left in -direction of arrow 2-.

– Then push relay lever forwards (-in direction of arrow 3-).

– Remove relay lever together with cable end-piece ⇒ page 75 .

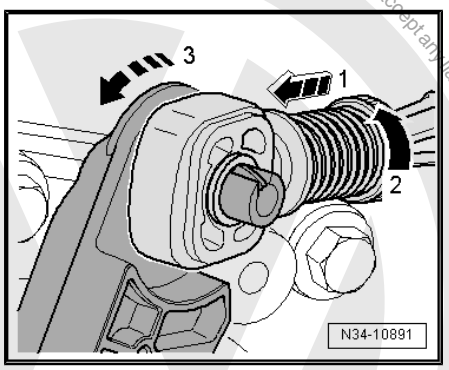

Continued for all selector mechanisms

– Remove cable support bracket from gearbox -arrows-.

– Remove noise insulation ⇒ General body repairs, exterior; Rep. gr. 50 ; Noise insulation .

– Remove tunnel cross member ⇒ Rep. gr. 26 ; Removing and installing parts of exhaust system .

– Remove underbody panels ⇒ General body repairs, exterior; Rep. gr. 50 .

– Separate front exhaust system at double clamp and detach from subframe ⇒ Rep. gr. 26 ; Removing and installing parts of exhaust system .

– Remove rear exhaust system and heat shield ⇒ Rep. gr. 26 ; Removing and installing parts of exhaust system .

– Swing selector housing down and remove with selector cables.

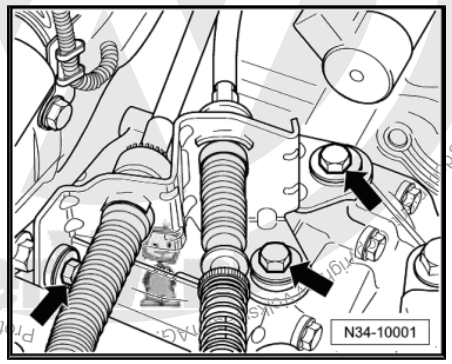

1.9.2 Installing

Install in the reverse order of removal, observing the following:

– Align selector housing parallel to body.

Protected by copyright. Copying for private or commercial purposes, in part or in whole, is not permitted unless authorised by Volkswagen AG. Volkswagen AG does not guarantee or accept any liability with respect to the correctness of information in this document.

Downloaded from www.Manualslib.com manuals search engine

- Distance to body must be same on both sides.

Secure selector housing ⇒ Item 26 (page 65) or
⇒ Item 16 (page 67) .

– Install cable support bracket on gearbox and tighten bolts to specified torques ⇒ Item 6 (page 71) and
⇒ Item 10 (page 71) .

The holes in the cable end-pieces have different diameters.

Allocation of cable end-pieces ⇒ page 73

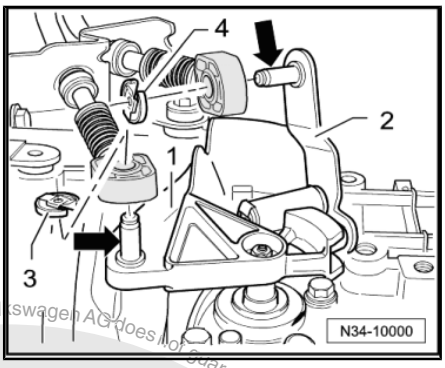

– Spread a small quantity of grease -G 000 450 02- on pin -arrows- of gearbox selector lever -1- and, as needed, relay lever pin -2-.

– Renew securing clip -3- and, for metal relay lever, securing clip -4- each time they are removed.

– Secure gear selector cable with securing clip -3- and gate selector cable with securing clip -4-.

Cable end-piece to plastic relay lever

– Fit relay lever and cable end-piece together ⇒ page 75 .

– Insert gate selector cable in cable end-piece.

Continued for all selector mechanisms

– Install centre console securing bracket and centre console ⇒ General body repairs, interior; Rep. gr. 68 ; Compartments, covers and trims .

– Install gaiter with selector knob and noise insulation ⇒ page 62 .

– Install underbody panels ⇒ General body repairs, exterior; Rep. gr. 50 .

– Install heat shield.

– Assemble exhaust system free of tension and attach tunnel cross member ⇒ Rep. gr. 26 ; Removing and installing parts of exhaust system .

– Adjust selector mechanism ⇒ page 82 .

– If complete air filter housing was removed, install it ⇒ Rep. gr. 23 ; Repairing diesel direct injection system or ⇒ Rep. gr. 24 ; Repairing injection system .

– Follow procedure after connecting battery ⇒ Electrical system; Rep. gr. 27 ; Battery; Disconnecting and connecting battery .

1.10 Removing and installing gear selector cable and gate selector cable

1.10.1 Removing

– Remove selector mechanism ⇒ page 78 .

Protected by copyright. Copy of or private or commercial purposes, in part or in whole is not permitted unless authorised by Volkswagen AG. Volkswagen AG does not guarantee or accept any liability with respect to the correctness of information in this document. Copyright by Volkswagen AG.

Downloaded from www.Manualslib.com manuals search engine

– Bend open tabs -arrows- of selector mechanism cover using a screwdriver and remove cover.

– Remove gasket.

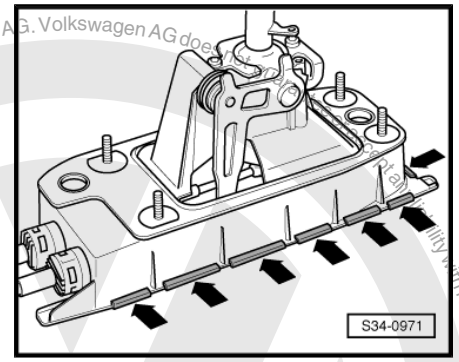

– Pull off securing clips -1 … 4-.

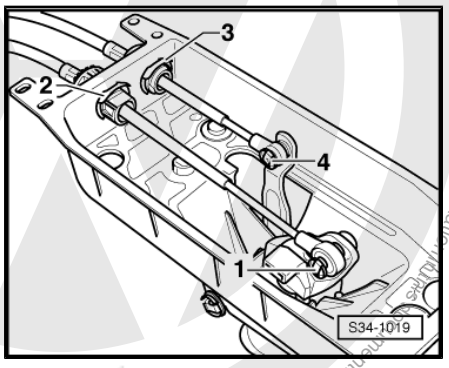

Note

Securing clips -1 and 4- have been discontinued on selector mechanisms from 11.06.

– Prise gear selector cable off gear lever and gate selector cable off gate selector lever with e.g. a screwdriver if necessary.

– Pull gear selector cable and gate selector cable from selector housing.

Release locks -A- for gear and gate selector cables -B- as follows:

♦ Push sliding sleeve forward to stop -arrow 1-.

♦ Turn sliding sleeve to right to stop -arrow 2- until it engages.

– Remove locking mechanism from Bowden cables.

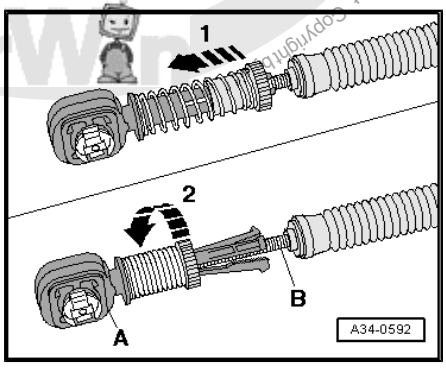

– Pull off securing clips -1- and -2-.

– Remove cable support bracket from Bowden cables.

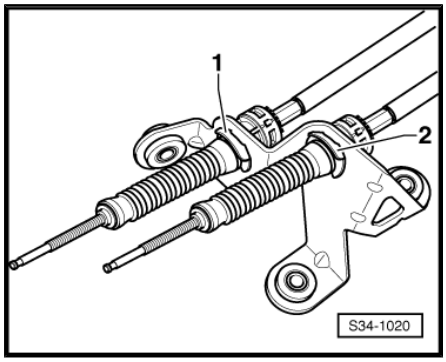

1.10.2 Installing

Install in the reverse order of removal, observing the following:

Downloaded from www.Manualslib.com manuals search engine

– Secure gear selector cable and gate selector cable to selector housing using securing clips -2 and 3-.

– Press gear selector cable onto gear lever and gate selector cable onto gate selector lever in selector housing and secure with clips -1 and 4-

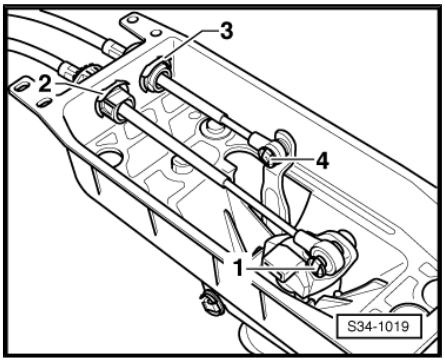

Note

Securing clips -1 and 4- have been discontinued on selector mechanisms from 11.06.

– Fit seal and secure selector mechanism cover by pressing down tabs -arrows-.

– Install selector mechanism ⇒ page 79 .

– Adjust selector mechanism ⇒ page 82 .

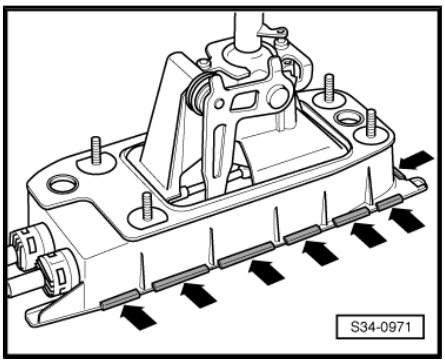

1.11 Adjusting selector mechanism

Locking pin -T10027 A-

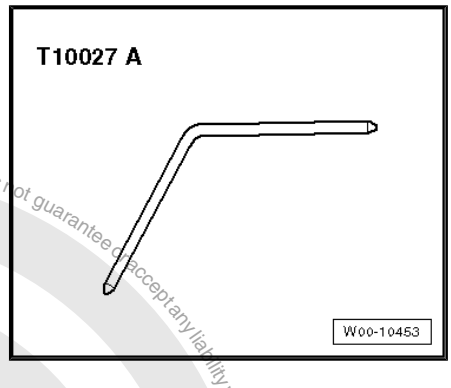

Note

- *The following points are essential to ensure correct adjustment of selector mechanism:*
- *Moving parts of selector mechanism and elements transferring force must be in proper condition.*
- *Selector mechanism must move freely.*
- *Gearbox, clutch and clutch mechanism must also be in proper condition.*

- Gearbox must be in neutral.

– Remove complete air filter housing if bracket -A- to secure gear selector cable and gate selector cable are not accessible ⇒ Rep. gr. 23 ; Repairing diesel direct injection system or ⇒ Rep. gr. 24 ; Repairing injection system .

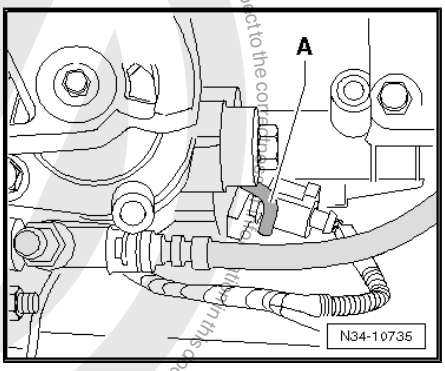

Protected by copyright. Copying for private or commercial purposes, in part or in whole is not permitted unless authorised by Volkswagen AG. Volkswagen AG does not guarantee or accept any liability with respect to the correctness of information in this document. Copyright by Volkswagen AG.

Downloaded from www.Manualslib.com manuals search engine

– Pull locking mechanisms on gate selector cable and gear selector cable end-pieces forward to stop -direction of arrow 1- and then turn to left to lock -direction of arrow 2-.

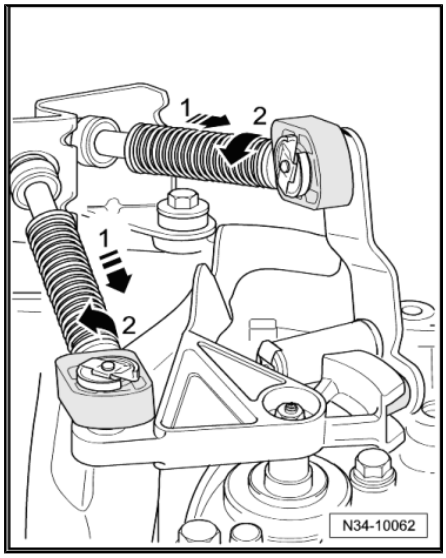

Secure selector shaft as follows:

– Press selector shaft down -direction of arrow 1-.
– While pressing down selector shaft, turn angled rod -A- in -direction of arrow 3- upwards and at the same time press it in -direction of arrow 2- until it engages in selector shaft.
– Remove gaiter with selector knob and frame ⇒ page 62 .
– If noise insulation is present, remove it.

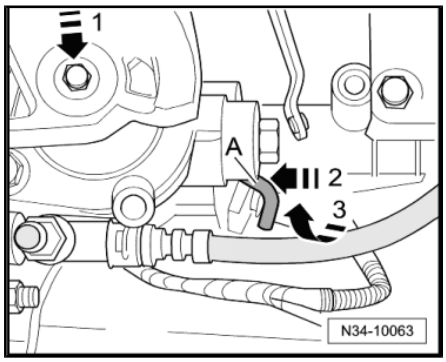

Now secure gear lever as follows:

– Select neutral using gear lever.
– Guide locking pin -T10027 A- through hole -A- into hole -B-.

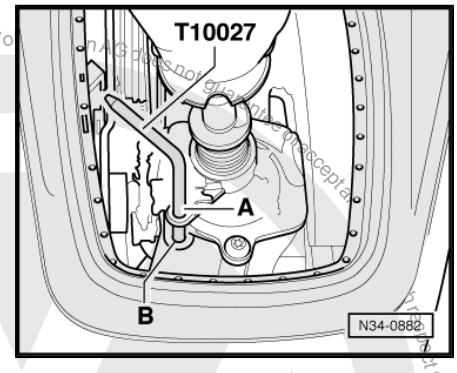

– Check that gate and selector cables -B- are inserted, free of tension, into locking devices -A-.
– Now turn locking mechanisms on gear selector cable and gate selector cable end pieces clockwise to stop -direction of arrow 1-.

The spring presses the locking mechanism into original position -direction of arrow 2-.

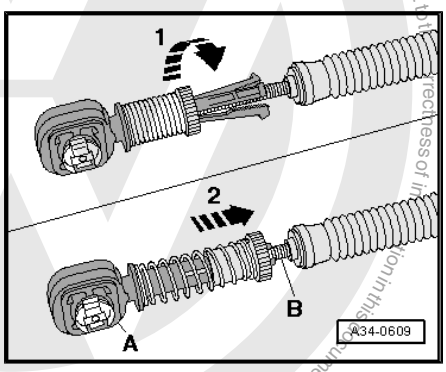

Protected by copyright. Copying for private or commercial purposes, in part or in whole, is not permitted unless authorised by Volkswagen AG. Volkswagen AG does not guarantee or accept any liability with respect to the correctness of information in this document. Copyright by Volkswagen AG.

Downloaded from www.Manualslib.com manuals search engine

– Now turn angled rod -A- back to original position -direction of arrow 2-.

• During this procedure, angled rod -A- must be pressed out of gearbox in -direction of arrow 1-.

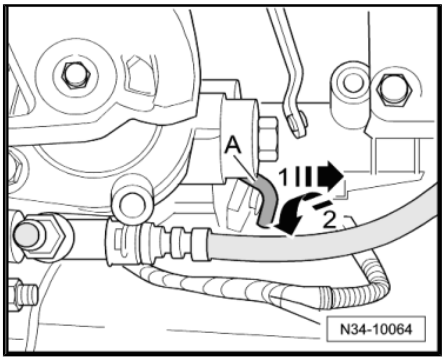

– Pull locking pin -T10027 A- out of holes -A- and -B-.

– If noise insulation was present, install it.

– Install gaiter with selector knob and frame ⇒ page 62 .

– Check that selector shaft moves freely.

– If removed, reinstall complete air filter housing ⇒ Rep. gr. 23 ; Repairing diesel direct injection system or ⇒ Rep. gr. 24 ; Repairing injection system

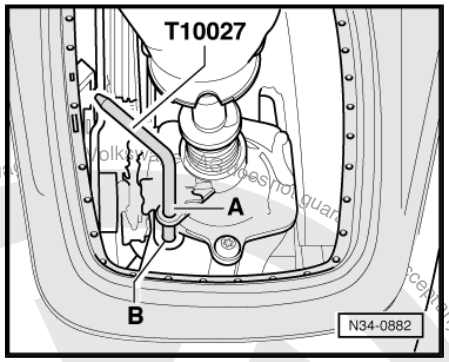

1.11.1 Functional check

• With gearbox in neutral, gear lever must rest in gate for 3rd and 4th gear.

– Operate clutch.

– Select all gears several times. Pay particular attention to operation of reverse gear lock.

– If it continues to be difficult to engage a gear after repeated attempts, repeat adjustment procedure of selector mechanism ⇒ page 82 .

Protected by copyright. Copying for private or commercial purposes, in part or in whole, is not permitted unless authorised by Volkswagen AG. Copyright by Volkswagen AG. Volkswagen AG does not guarantee or accept any liability with respect to the correctness of information in this document.

Downloaded from www.Manualslib.com manuals search engine

2 Removing and installing gearbox in vehicles with turbo diesel engine

2.1 Removing gearbox

Special tools and workshop equipment required

- Support bracket -10 - 222 A-
- Adapter -10-222 A /8-
- Adapter -10-222 A /3-
- Adapter -10-222 A /18-
- Gearbox support -3282-

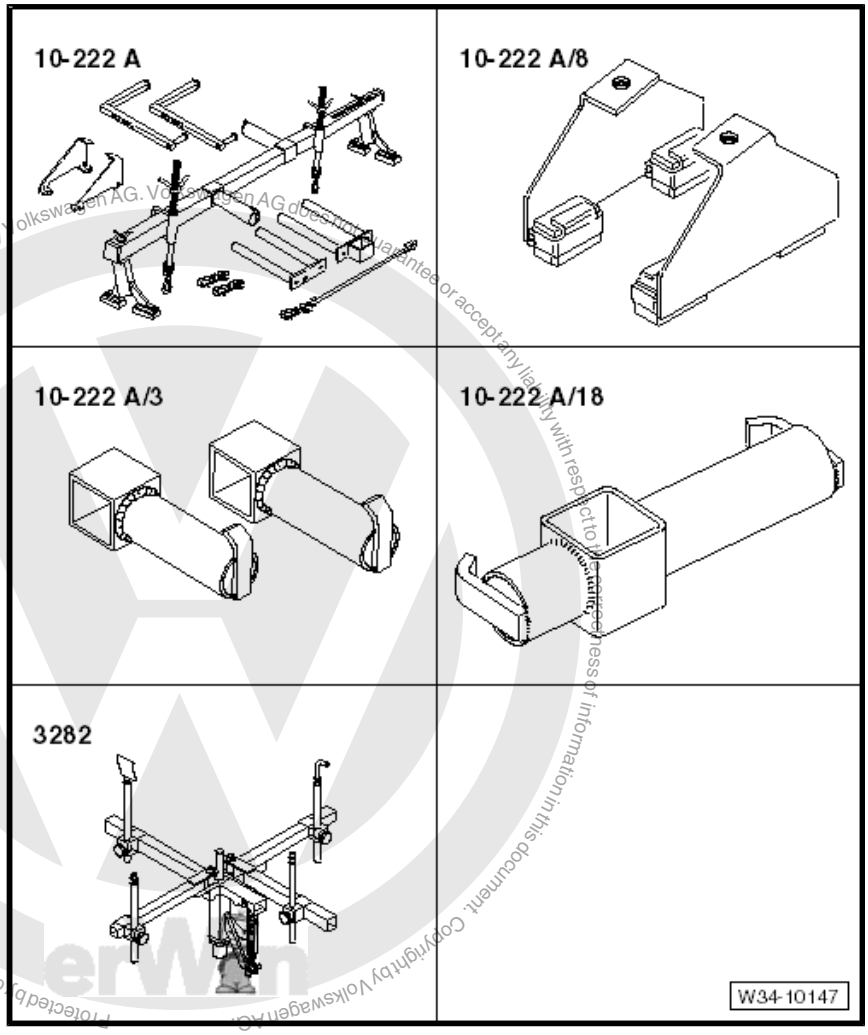

Protected by copyright. Copying for private or commercial purposes, in part or in whole, is not permitted unless authorised by Volkswagen AG. Volkswagen AG does not guarantee or accept any liability with respect to the correctness of information in this document. Copyright by Volkswagen AG.

Downloaded from www.Manualslib.com manuals search engine

- Support elements for gearbox (determine when setting adjustment plate on gearbox support)
- Adjustment plate -3282/33-
- Gearbox lifting tackle -3336- for transporting gearbox
- Torque wrench -V.A.G 1331-
- Torque wrench -V.A.G 1332-
- Engine and gearbox jack -V.A.G 1383 A-

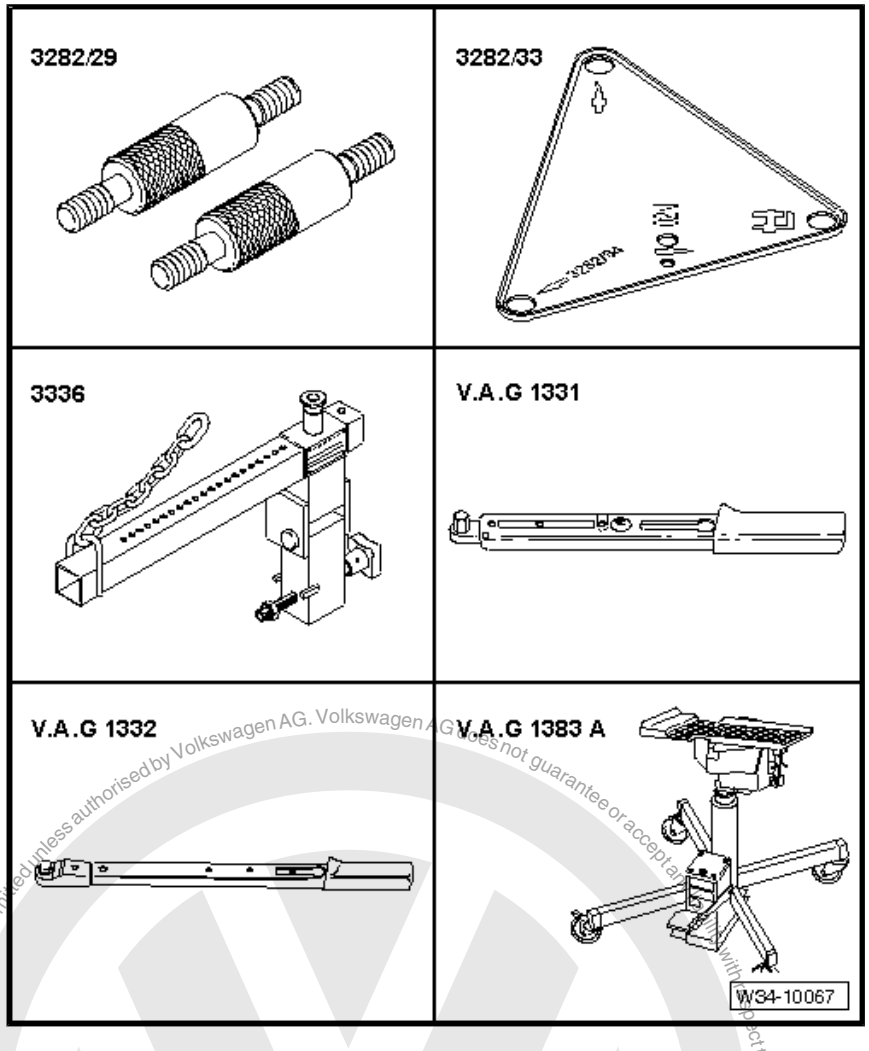

Protected by copyright. Copying for private or commercial purposes, in part or in whole, is not permitted unless authorised by Volkswagen AG. Volkswagen AG does not guarantee or accept any liability with respect to the correctness of information in this document. Copyright by Volkswagen AG.

Downloaded from www.Manualslib.com manuals search engine

- Bracket -T10346-
- Engine support -3300 A-
- Adapter -VW 771/40-
- Hose clamps to 25 mm -3094-
- Grease for clutch plate splines -G 000 100-
- Allocate grease using ⇒ Electronic parts catalogue (ETKA) .
- Flange bolt M6 X 20
- Flange bolt M6 X 80
- Hexagon head bolt M10 x 20

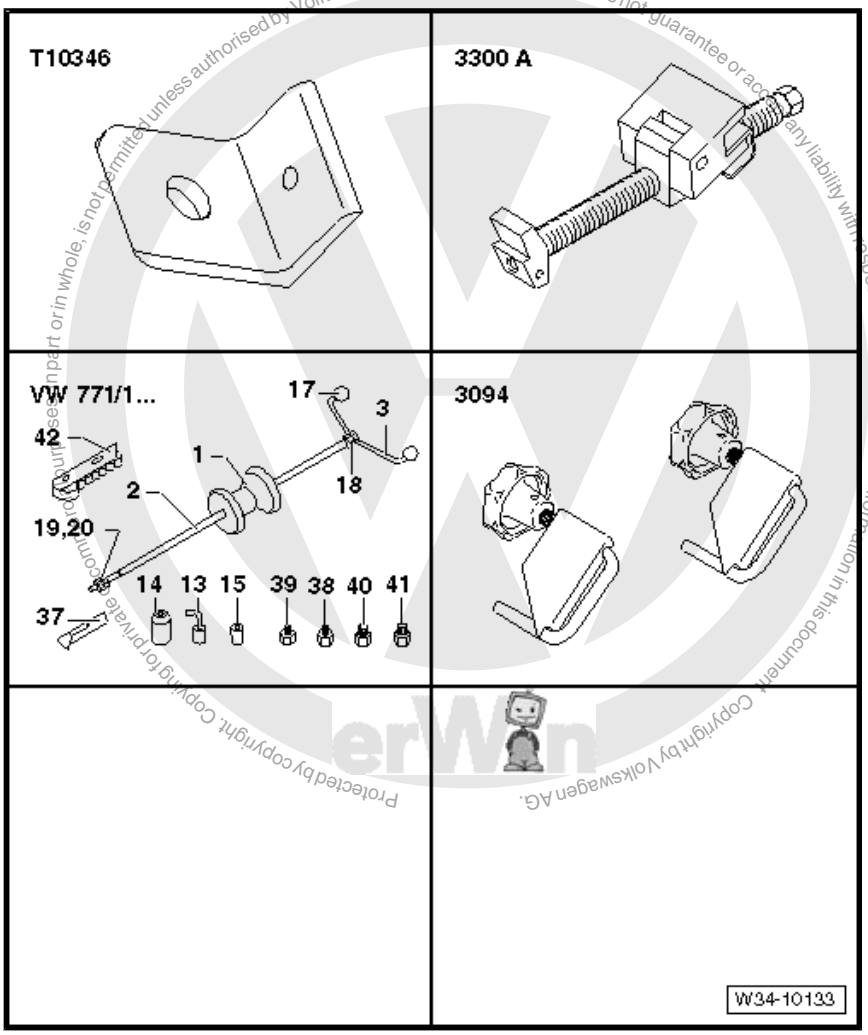

At a later point, support bracket -10-222 A- will be put onto longitudinal members with adapters -10 - 222 A /8- .

- To prevent damage to edges of wings, cover bottom area of both adapters -10 - 222 A /8- with self-adhesive fabric tape -arrow- ⇒ Electronic parts catalogue (ETKA chemical substances) .

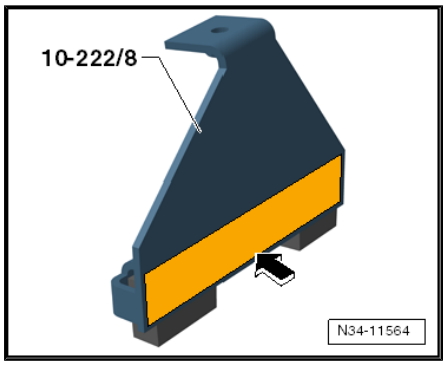

Removing

– Check whether a coded radio is fitted. If so, obtain anti-theft code.

– With ignition switched off, disconnect battery earth strap ⇒ Electrical system; Rep. gr. 27 ; Disconnecting and connecting battery .

At a later point, the support bracket -10-222 A- will be connected to the lifting eyes of engine.

– If engine cover blocks access, remove engine cover.

– Remove complete air filter housing if it is located close to the battery ⇒ Rep. gr. 23 ; Repairing diesel direct injection system .

– Remove battery, battery cover and battery tray ⇒ Electrical system; Rep. gr. 27 ; Removing and installing battery .

Downloaded from www.Manualslib.com manuals search engine

– Remove securing clip -1- for gear selector cable from gearbox selector lever -2- and pull cable off pin -arrow-.

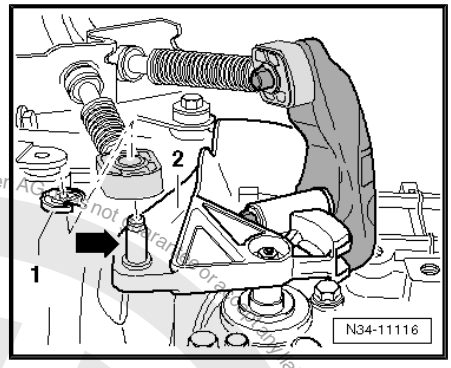

– Releasing cable end-piece from gate selector cable

• To avoid damage to gate selector cable, separate cable end-piece from gate selector cable before removal.

– Pull locking mechanism forward to stop in -direction of arrow 1- and then lock by turning to left in -direction of arrow 2-.

– Then push relay lever forwards (-in direction of arrow 3-).

– The relay lever is removed together with the cable end-piece at a later point.

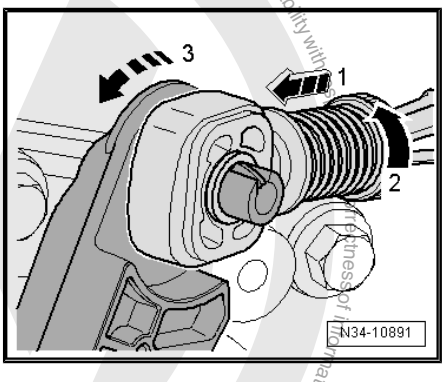

– Remove cable support bracket from gearbox -arrows-, lay to side and secure with wire.

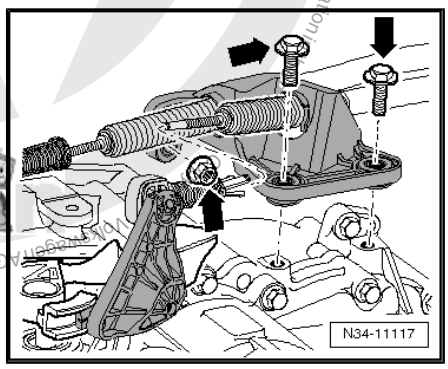

LHD

– Clamp off supply hose to master cylinder using hose clamp -3094- .

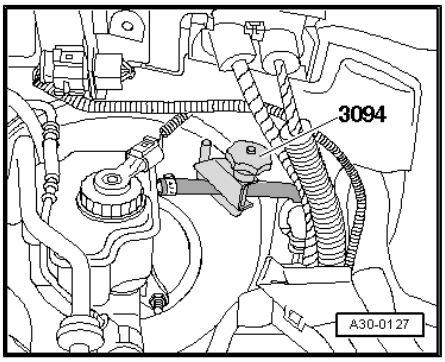

Protected by copyright. Copying for private or commercial purposes, in part or whole, is not permitted unless authorised by Volkswagen AG. Volkswagen AG does not guarantee or accept any liability with respect to the correctness of information in this document. Copyright by Volkswagen AG.

Downloaded from www.Manualslib.com manuals search engine

Protected by copyright. Copying for private or commercial purposes, in part or in whole, is not permitted unless authorised by Volkswagen AG. Volkswagen AG does not guarantee or accept any liability with respect to the correctness of information in this document. Copyright by Volkswagen AG.

Right-hand drive

– Clamp off hose of pipe/hose line -A- to slave cylinder using hose clamp -3094- .

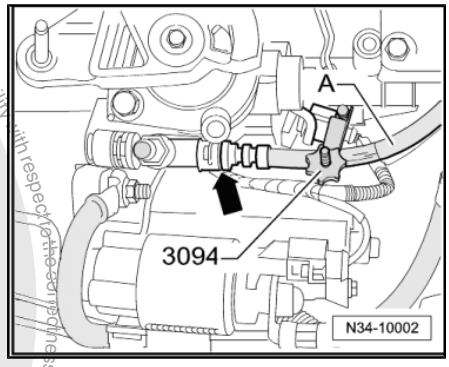

Continuation for all

– Pull out clip -arrow- for pipe/hose line or plastic line to stop.

– Pull pipe/hose line or plastic line out from slave cylinder bleeder and seal.

> ⚠ **Caution**
>
> *Do not operate clutch pedal any more.*

– Remove earth strap -1- from top starter bolt.

– Separate electrical connector -2- for reversing light switch -F4- .

– Remove connector and wire from starter.

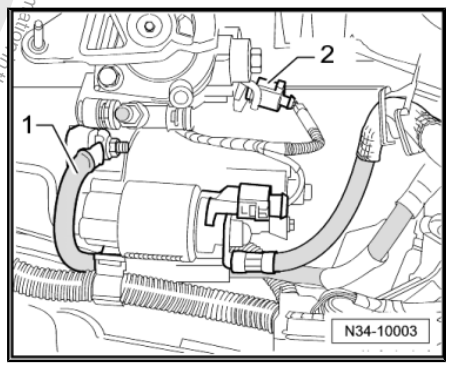

– Remove upper engine/gearbox connecting bolts -arrows-.

– Then remove upper securing bolt on starter.

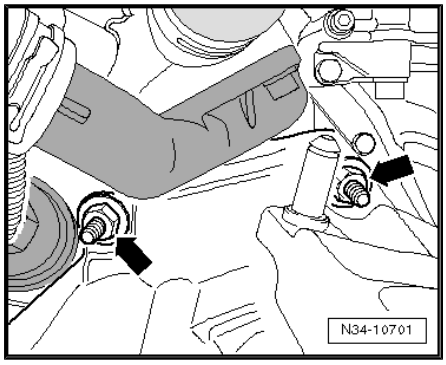

– Bolt bracket -T10346- to rear of the 3 mounting holes for battery tray.

– To do this, use a collar bolt M 6 x 80 or a securing bolt for battery tray.

– If there are hose and cable connections in area of engine support eye for support bracket -10-222 A- , remove these now.

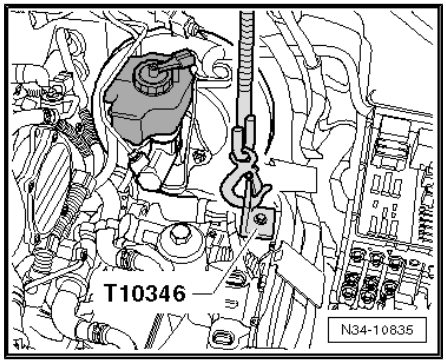

Downloaded from www.Manualslib.com manuals search engine

– Set up support bracket -10-222 A- in front of bonnet support.

– Use:

♦ Adapter -10-222 A /3-

♦ Adapter -10-222 A /8-

♦ Adapter -10-222 A /18-

– Position adapter -10-222 A /8- :

• On upper longitudinal carrier, directly before the elevation (-arrow 1-) next to bolt (-arrow 2-)

– Connect bracket -T10346- to support bracket .

– Attach spindles in left engine support eyes.

– Take up weight of engine/gearbox assembly and support bracket on spindles.

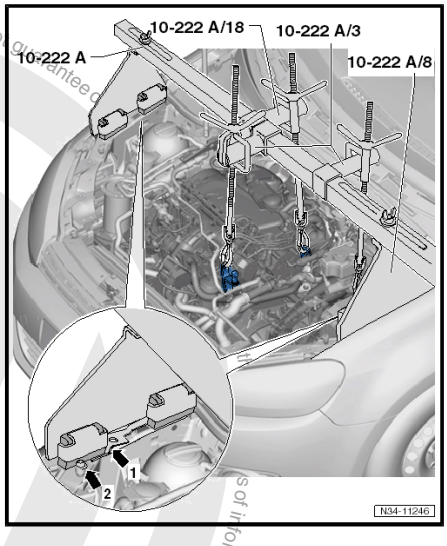

The left drive shaft will be removed in a later step.

– With vehicle standing on its wheels, loosen front left flange bolt -arrow- 90° at most, or wheel bearing will be damaged ⇒ Running gear, axles, steering; Rep. gr. 40 ; Removing and installing drive shafts .

– Remove noise insulation ⇒ General body repairs, exterior; Rep. gr. 50 ; Noise insulation .

– Remove lower part of front left wheel housing liner ⇒ General body repairs, exterior; Rep. gr. 66 ; Wheel housing liner .

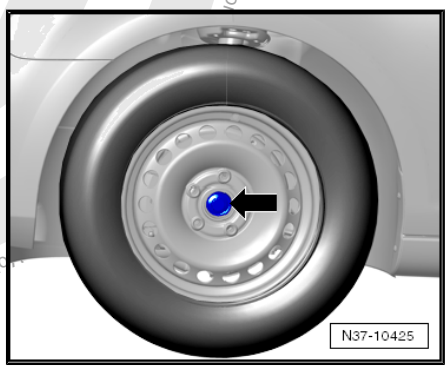

– Gearboxes for vehicles with start-stop system: pull connector -arrow- off gearbox neutral position sender -G701- .

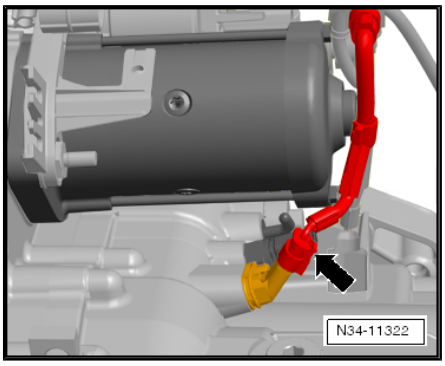

– If front vehicle level sender -G78- is present, unbolt it from transverse link ⇒ Rep. gr. 40 ; Removing and installing front vehicle level sender -G78- .

– Remove bracket from starter.

– Remove starter ⇒ Electrical system; Rep. gr. 27 ; Starter .

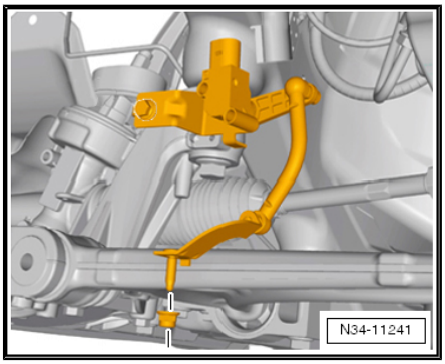

Downloaded from www.Manualslib.com manuals search engine

– Remove left charge air hose -arrow 1- and -arrow 2- ⇒ Rep. gr. 21 ; Charge air system with turbocharger .
– Remove charge air pipe from engine ⇒ Rep. gr. 21 ; Charge air system with turbocharger .
– Remove right charge air hose from charge air cooler ⇒ Rep. gr. 21 ; Charge air system with turbocharger .

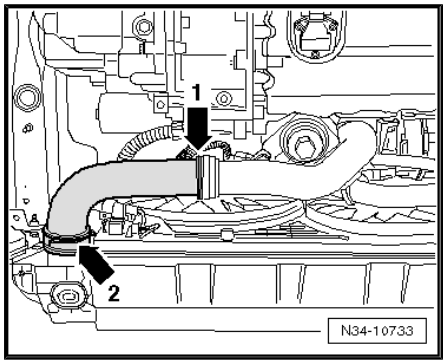

– Remove cowling -arrow- together with radiator fans ⇒ Rep. gr. 19 ; Parts of cooling system .

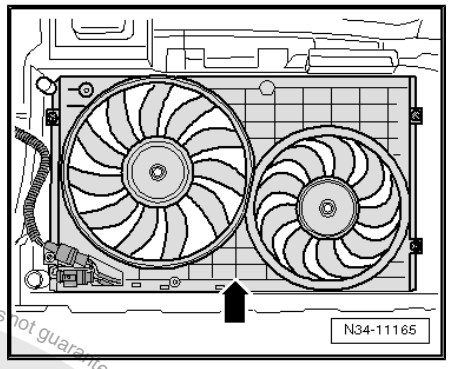

– Remove exhaust system bracket from subframe -arrows- ⇒ Rep. gr. 26 ; Removing and installing parts of exhaust system .

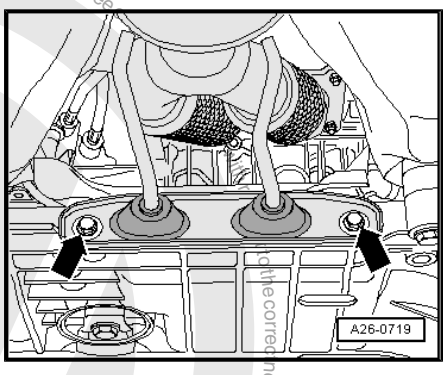

– Separate exhaust system at double clamp -arrows-.
– Raise and secure front exhaust pipe or rest it on tunnel bridge.

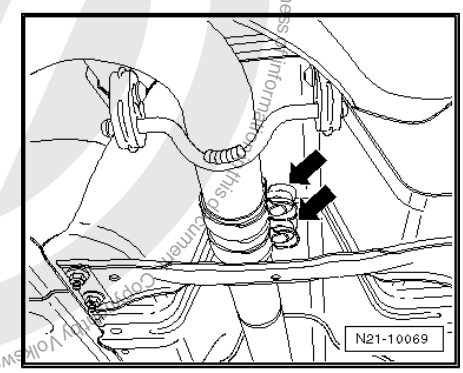

Protected by copyright. Copying for private or commercial purposes, in part or in whole, is not permitted unless authorised by Volkswagen AG. Volkswagen AG does not guarantee the correctness of this document. Copyright by Volkswagen AG.

Downloaded from www.Manualslib.com manuals search engine

– Remove pendulum support.

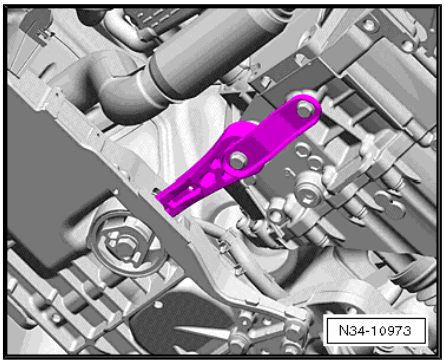

– Pull connector -1- off oil level and oil temperature sender - G266- .
– Remove left coupling rod from anti-roll bar and lay to side ⇒ Running gear, axles, steering; Rep. gr. 40 ; Repairing front wheel suspension .
– Remove left drive shaft ⇒ Running gear, axles, steering; Rep. gr. 40 ; Removing and installing drive shafts .

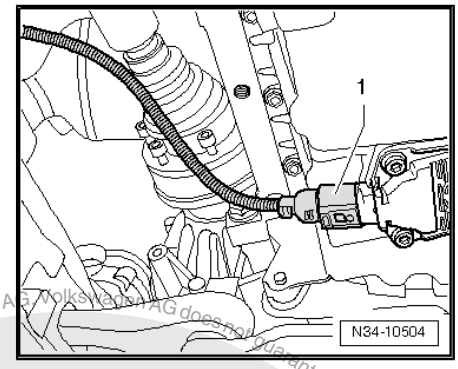

– Remove drive shaft heat shield, if present -arrows- ⇒ Running gear, axles, steering; Rep. gr. 40 ; Repairing drive shafts .
– Remove right drive shaft from gearbox, raise and secure it ⇒ Running gear, axles, steering; Rep. gr. 40 ; Removing and installing drive shafts .

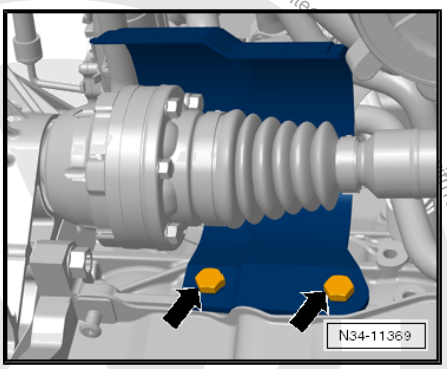

– Remove hexagon bolts -arrows- on left engine/gearbox mounting -2- from bracket -1-.

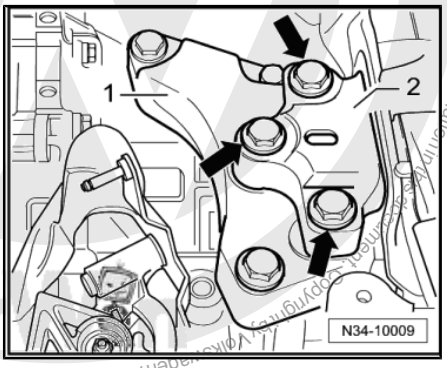

Protected by copyright. Copying for private or commercial purposes, in part or in whole, is not permitted unless authorised by Volkswagen AG. Volkswagen AG does not guarantee or accept any liability with respect to the correctness of information.

Downloaded from www.Manualslib.com manuals search engine

– Lower gearbox about 40 mm, dimension -a-, by adjusting spindles attached to engine.

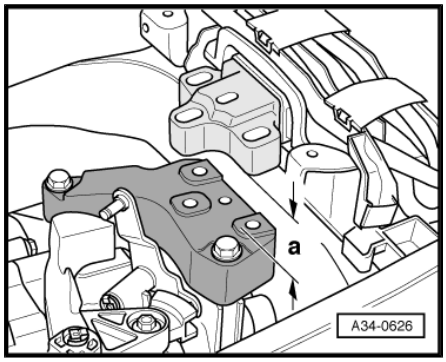

Note

Observe connecting lines, hoses and radiator when moving engine/gearbox assembly.

– Remove bracket -1- from gearbox -arrows-.

– Remove relay lever together with cable end-piece ⇒ page 75 .

– Remove gearbox selector lever from selector shaft.

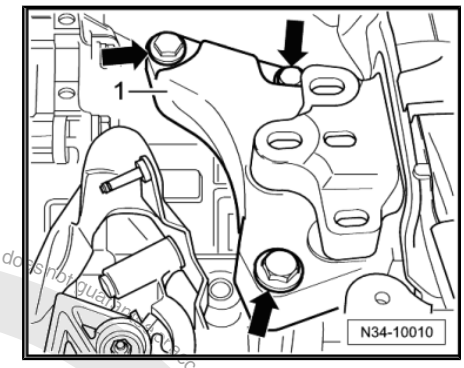

– If small cover plate -A- for flywheel is present, remove it -arrows-.

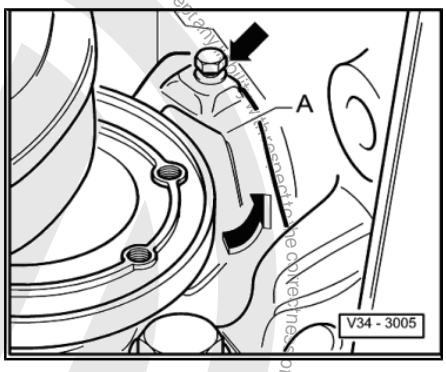

– Remove lower engine/gearbox connecting bolt -1-.

Note

Loosen engine/gearbox connecting bolt -3- and leave it installed just hand-tight.

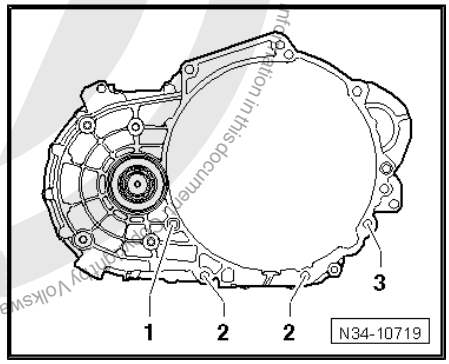

Protected by copyright. Copying for private or commercial purposes, in part or in whole, is not permitted unless authorised by Volkswagen AG. Volkswagen AG does not guarantee or accept any liability with respect to the correctness of information in this document. Copyright by Volkswagen AG.

Downloaded from www.Manualslib.com manuals search engine

– Attach bracket -T10346- with bolt -1- to left threaded hole in subframe.

-1- = Flange bolt M6 x 20.

– Secure engine support -3300 A- to bracket -T10346- .

– Place a cloth between engine support -3300 A- and oil pan.

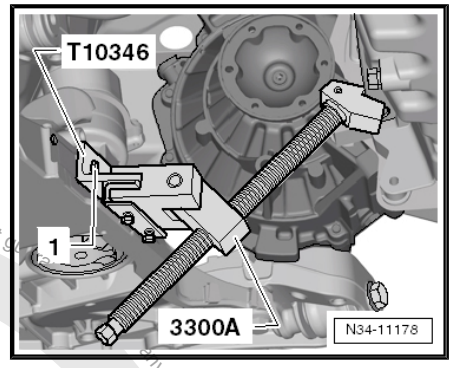

– Press engine forwards using spindle of engine support -3300 A- . In the process, observe the following points in particular:

- The air conditioning compressor -2- must not contact -arrow- the refrigerant line -1-.
- The alternator must not contact the refrigerant line.
- The pressure pipe must not contact the radiator.

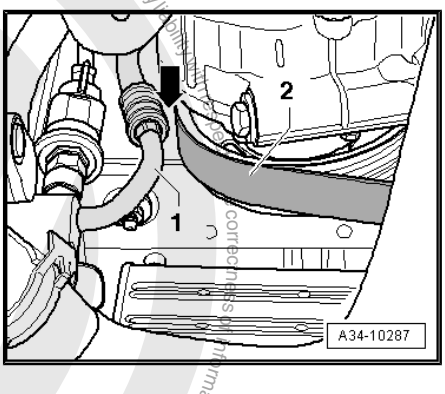

To remove gearbox „02Q“, set up gearbox support -3282- with adjustment plate -3282/33- .

– Insert gearbox support -3282- in engine and gearbox jack -V.A.G 1383 A- .

– Align arms of gearbox support according to holes in adjustment plate .

– Attach support elements -A- to adjustment plate as illustrated.

– Screw in pin -3282/29- in place of support element -C-.

– Position engine and gearbox jack -V.A.G 1383 A- under vehicle. Arrow -B- on adjustment plate points in direction of vehicle travel.

– Align adjustment plate parallel to gearbox.

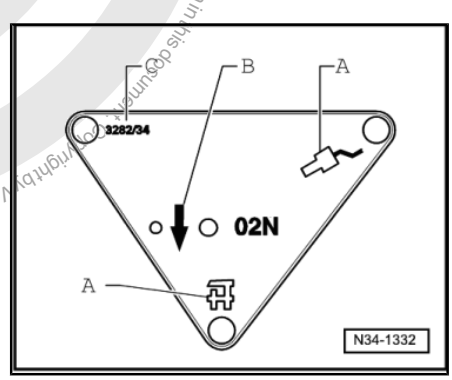

– Attach adapter -VW 771/40- in threaded hole of gearbox housing as shown in illustration.

– Then screw pin -3282/29- into hole on gearbox for securing bolt of pendulum support.

– Secure gearbox to gearbox support -3282- using bolt (M10x20) -A-.

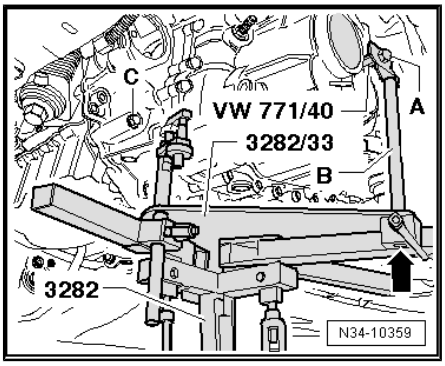

Downloaded from www.Manualslib.com manuals search engine

Pin -B- must lie flush with guide from gearbox support -3282- at bottom -arrow-.

Engine/gearbox connecting bolt -arrow- has been removed.

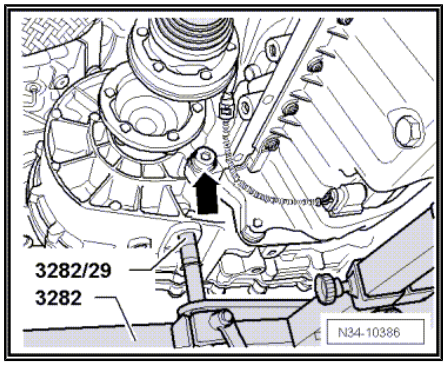

– Remove connecting bolt for engine/gearbox -C- as well as lower connecting bolts for engine/gearbox.
– Press gearbox away from engine, off dowel sleeves.
– Tilt gearbox in area of differential using spindles of gearbox support -3282- .
• Differential must face upwards.

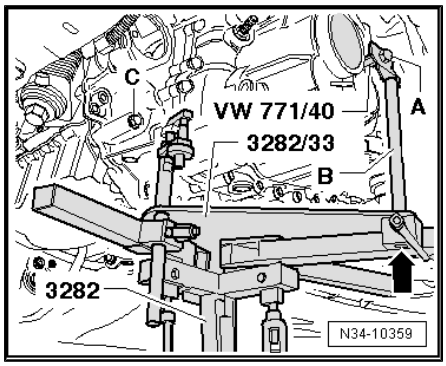

Right flange shaft -1- must be guided past bolt hole of engine -2-.

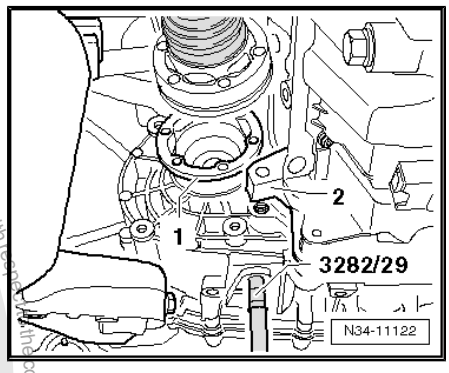

– Guide gearbox with differential -A- over subframe and swing out.

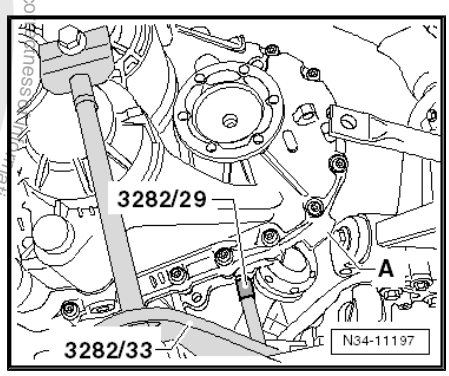

Protected by copyright. Copying for private or commercial purposes, in part or in whole, is not permitted unless authorised by Volkswagen AG. Volkswagen AG does not guarantee or accept any liability with respect to the correctness of information in this document. Copyright by Volkswagen AG.

Downloaded from www.Manualslib.com manuals search engine

– Observe longitudinal member -arrows-. Then carefully lower gearbox.

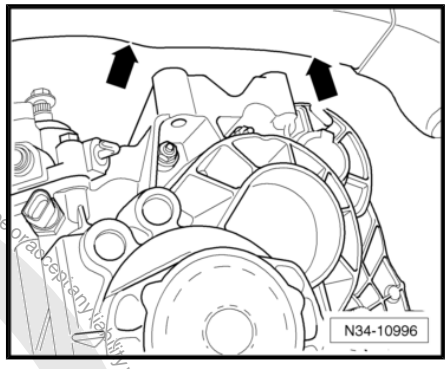

Note

Be careful of all lines when lowering gearbox.

2.2 Transporting gearbox

Special tools and workshop equipment required

♦ Gearbox mounting support -3336-

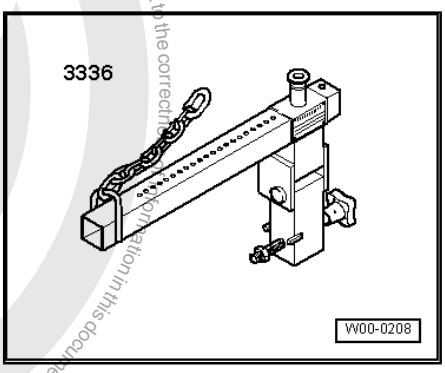

♦ Workshop hoist -VAS 6100-

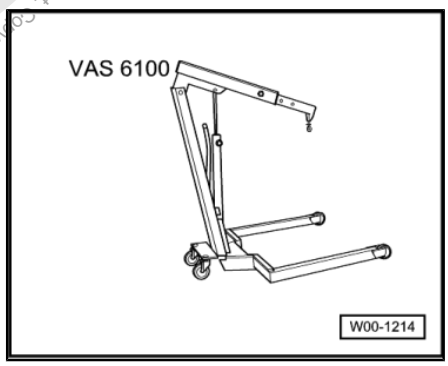

– Bolt gearbox lifting tackle -3336- to clutch housing.

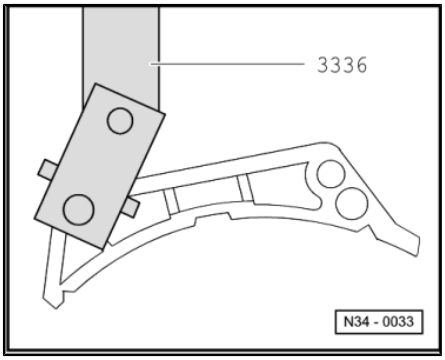

Protected by copyright. Copying for private or commercial purposes, in part or in whole, is not permitted unless authorised by Volkswagen AG. Volkswagen AG does not guarantee or accept any liability with respect to the correctness of information in this document. Copyright by Volkswagen AG.

Downloaded from www.Manualslib.com manuals search engine

– Adjust support beam on sliding piece using locking pin -arrow-.

  Number of holes visible = 6.

– Lift gearbox using workshop crane and gearbox lifting tackle -3336- .

– Set gearbox aside, for example in a transport container.

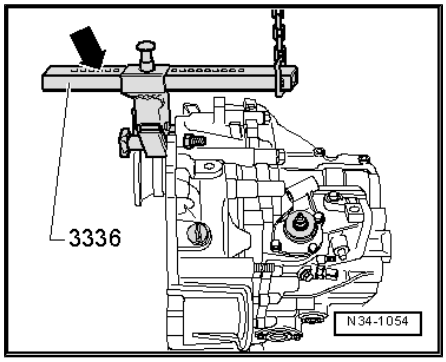

2.3 Installing gearbox

Note

- *Refer to procedure „Removing gearbox“ for required special tools ⇒ page 85 .*
- *Renew self-locking nuts and bolts.*
- *Renew bolts which must be tightened further to a torque angle.*
- *All cable ties which were opened or cut during removal must be renewed at the same points.*
- *Clean input shaft splines and, on used clutch plate, hub splines. Remove corrosion and apply only a very thin coat of clutch plate spline grease -G 000 100- to splines. Then move clutch plate to and fro on input shaft until hub moves freely on shaft. Remove excessive grease.*

– If the gearbox is to be renewed, the gearbox selector lever and relay lever must be transferred to the new gearbox.

– All threaded holes into which self-locking bolts are to be screwed must be cleaned of residual locking fluid carefully with a thread tap.

– Check whether dowel sleeves for aligning engine and gearbox are fitted in cylinder block and install if necessary.

If dowel sleeves are not fitted, difficulties shifting gears, clutch problems and possible noises from the gearbox (rattling of gears which are not engaged) could occur.

– Ensure that intermediate plate is hooked into sealing flange and pushed onto dowel sleeves -arrows-.

– Check release bearing for wear. If necessary, renew slave cylinder with release bearing ⇒ page 40 .

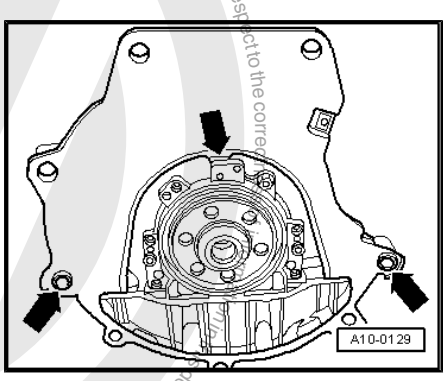

Protected by copyright. Copying for private or commercial purposes, in part or in whole, is not permitted unless authorized by Volkswagen AG. Volkswagen AG does not guarantee or accept any liability with respect to the correctness of this document. Copyright by Volkswagen AG.

Downloaded from www.Manualslib.com manuals search engine

– Attach bracket -T10346- with bolt -1- to left threaded hole in subframe.

-1- = Flange bolt M6 x 20.

– Secure engine support -3300 A- to bracket -T10346- .

– Place a cloth between engine support -3300 A- and oil pan.

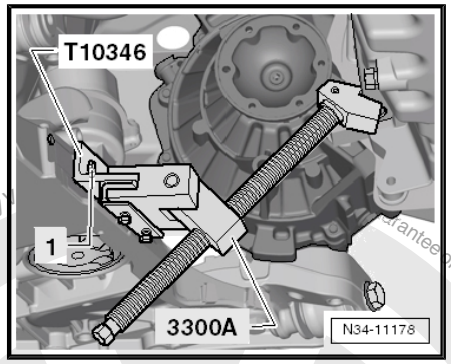

– Press engine forwards using spindle of engine support -3300 A- . In the process, observe the following points in particular:

- The air conditioning compressor -2- must not contact -arrow- the refrigerant line -1-.
- The alternator must not contact the refrigerant line.
- The pressure pipe must not contact the radiator.

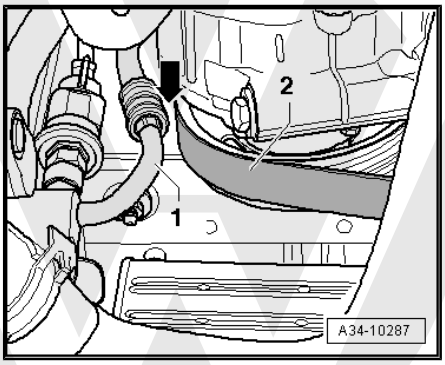

To install gearbox „02Q“, set up gearbox support -3282- with adjustment plate -3282/33- .

– Align arms of gearbox support according to holes in adjustment plate .

– Attach support elements -A- to adjustment plate as illustrated.

– Screw in pin -3282/29- in place of support element -C-.

– Place gearbox on engine and gearbox jack -V.A.G 1383 A- .

– Align adjustment plate and gearbox parallel to one another.

– Screw pin -3282/29- into hole on gearbox for securing bolt of pendulum support.

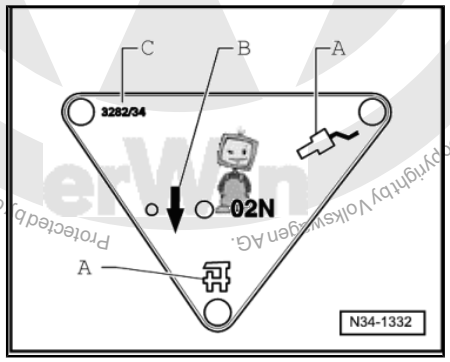

– Secure adapter -VW 771/40- in threaded hole of gearbox housing as shown in figure.

– Secure gearbox to gearbox support -3282- using bolt (M10x20) -A-.

Pin -B- must lie flush with guide from gearbox support -3282- at bottom -arrow-.

– Position engine and gearbox jack -V.A.G 1383 A- under vehicle. Arrow on adjustment plate points in direction of vehicle travel.

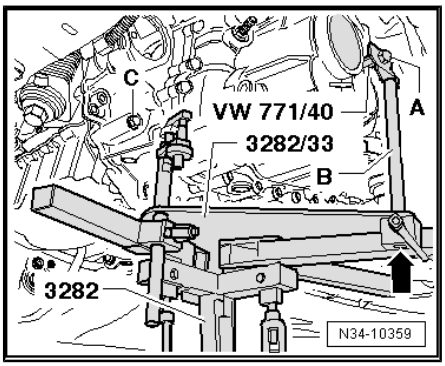

Note

Be careful of all lines when installing gearbox.

– Then carefully raise gearbox.

Protected by copyright. Copyright by Volkswagen AG. Copying for commercial purposes, partial or in whole, is not permitted unless authorised by VW. VW does not guarantee or accept any liability with respect to the correctness of information in this document.

Downloaded from www.Manualslib.com manuals search engine

– Now turn gearbox upwards near differential, using spindle of gearbox support -3282- , and downwards near 6th gear.

– Guide gearbox with differential -A- over subframe.

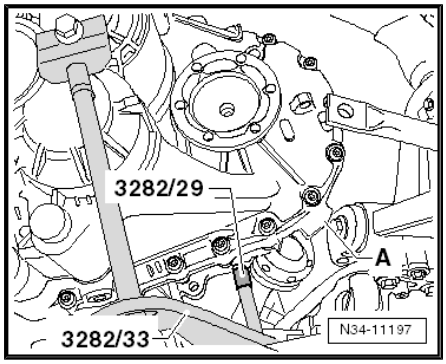

• The right flange shaft must then be guided past the flywheel -arrow 2-; observe the intermediate plate -arrow 1-.

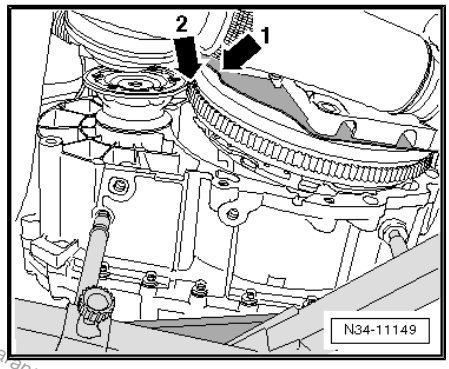

– Right flange shaft -1- must be guided past bolt hole of engine -2-.

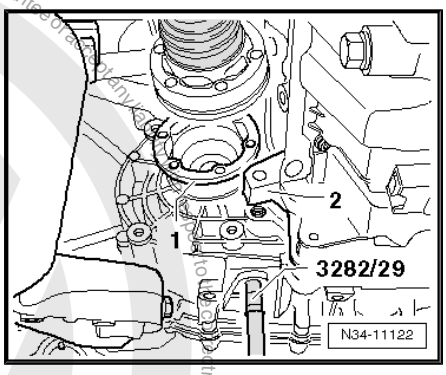

– When doing this, use spindles of gearbox support -3282- to adjust position of gearbox so that longitudinal member -arrows- is not touched.

– Then turn gearbox to installation position via spindles of gearbox support -3282- .

– Align gearbox on engine dowel sleeves and join.

– Screw in engine/gearbox connecting bolt -C- and tighten to specified torque ⇒ page 104 .

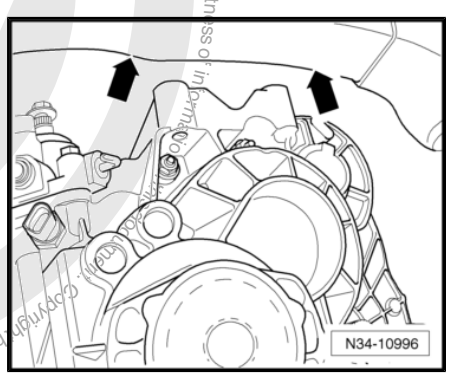

Protected by copyright. Copying for private or commercial purposes, in part or in whole, is not permitted unless authorised by Volkswagen AG. Volkswagen AG does not guarantee or accept any liability with respect to the correctness of information in this document. Copyright by Volkswagen AG.

Downloaded from www.Manualslib.com manuals search engine

– Screw in lower engine/gearbox securing bolts and tighten to specified torque ⇒ page 104 .

– Remove engine support -3300 A- and bracket -T10346- .

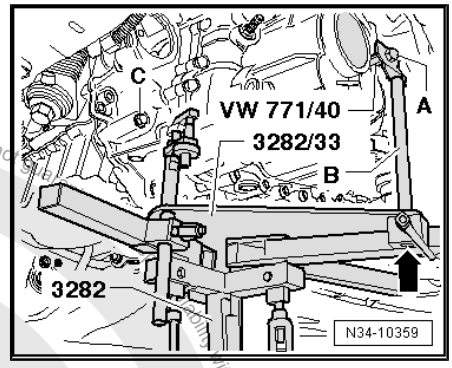

– Screw in engine/gearbox connecting bolt -arrow- and tighten to specified torque ⇒ page 104 .

– After bottom of gearbox and engine are bolted together, remove gearbox support -3282- from gearbox.

– Insert upper engine/gearbox securing bolts and tighten to torque specification ⇒ page 104 .

– Attach gearbox selector lever to selector shaft of gearbox ⇒ page 73 and tighten hexagon nut to specified torque ⇒ Item 17 (page 72) .

– Install relay lever together with cable end-piece ⇒ page 75 .

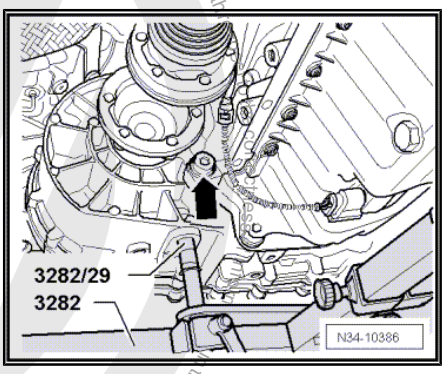

– Install bracket -1- on gearbox using new hexagonal bolts -arrows- and tighten to specified torque ⇒ page 104 .

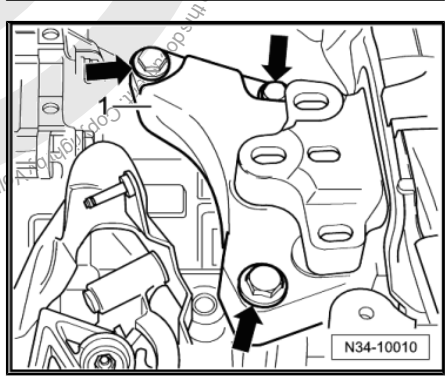

– Align engine and gearbox in installation position. To do this, raise sufficiently so that bracket -1- completely contacts left assembly mounting -2-.

– Screw new hexagon bolts -arrows- for left assembly mounting -2- into bracket -1- and tighten to specified torque ⇒ page 104 .

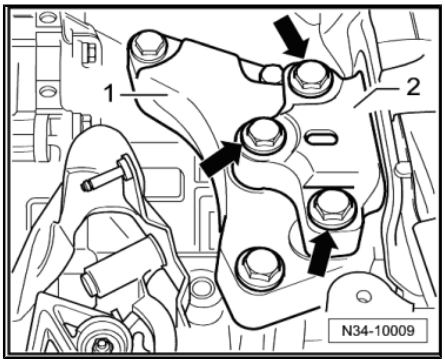

Note

Install engine and gearbox mounting free of tension ⇒ Rep. gr. 10 ; Removing and installing engine .

WARNING

Do not remove support bracket -10-222 A- until all bolts securing the assembly mounting have been tightened to specified torque.

Protected by copyright. Copying for private or commercial purposes, in part or in whole, is not permitted unless authorised by Volkswagen AG. Volkswagen AG does not guarantee or accept any liability with respect to the correctness and completeness of this document.

Downloaded from www.Manualslib.com manuals search engine

– If small cover plate -A- for flywheel is present, install it -arrows- ⇒ page 104 .

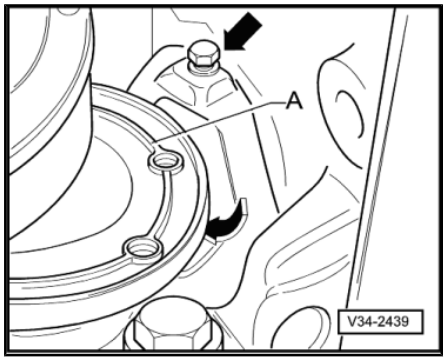

Note

- *There are threaded inserts, e.g. „HeliCoil“ in the bolting holes for the pendulum support.*
- *Distinguishing feature: shoulder along beginning of thread -arrow-.*
- *Note corresponding securing bolts and specified torque ⇒ Running gear, axles, steering; Rep. gr. 40 ; Assembly overview - subframe, anti-roll bar, suspension links .*

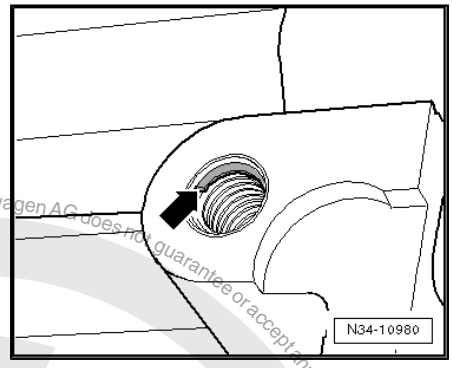

– Install pendulum support ⇒ Running gear, axles, steering; Rep. gr. 40 ; Assembly overview - Subframe, anti-roll bar, suspension links .
– Then install drive shafts ⇒ Running gear, axles, steering; Rep. gr. 40 ; Removing and installing drive shafts .

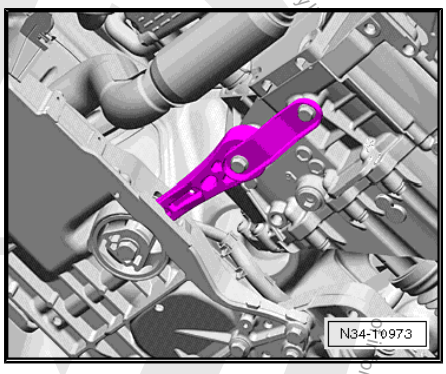

– Install drive shaft heat shield, if present -arrows- ⇒ Running gear, axles, steering; Rep. gr. 40 ; Repairing drive shafts .
– Install left coupling rod ⇒ Running gear, axles, steering; Rep. gr. 40 ; Repairing front suspension .

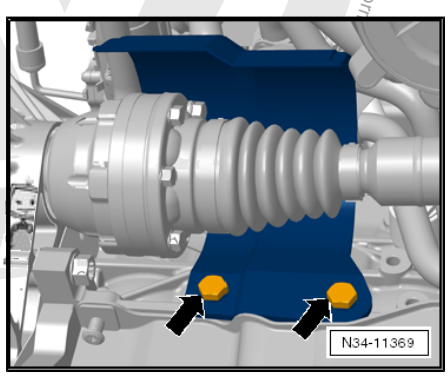

Protected by copyright. Copying for private or commercial purposes, in part or in whole, is not permitted unless authorised by Volkswagen AG. Volkswagen AG does not guarantee or accept any

Downloaded from www.Manualslib.com manuals search engine

– If front vehicle level sender -G78- is present, bolt it onto transverse link ⇒ Rep. gr. 40 ; Removing and installing front vehicle level sender -G78- .

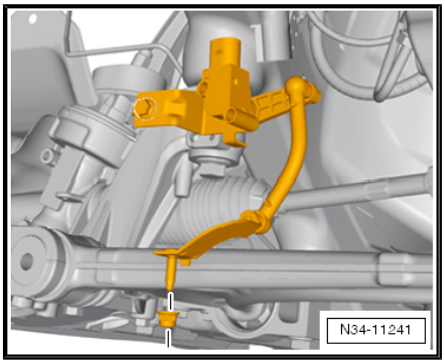

– Attach connector -1- to oil level and oil temperature sender -G266- .
– Assemble exhaust system and attach exhaust system bracket to subframe ⇒ Rep. gr. 26 ; Removing and installing parts of exhaust system .

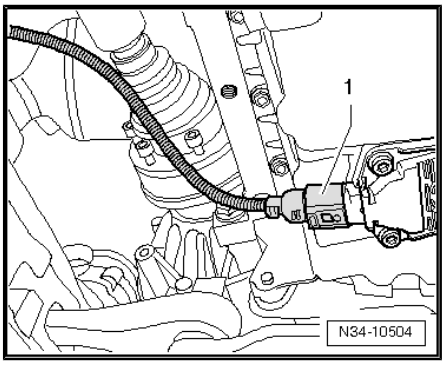

– Install cowling -arrow- together with radiator fans ⇒ Rep. gr. 19 ; Parts of cooling system
– Install charge air pipe on engine ⇒ Rep. gr. 21 ; Charge air system with turbocharger .
– Install left charge air hose -arrow 1- and -arrow 2- ⇒ Rep. gr. 21 ; Charge air system with turbocharger .

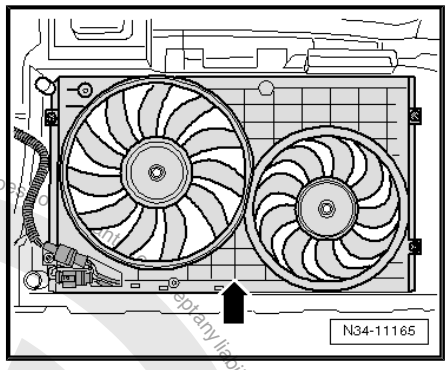

– Fit right charge air hose to charge air cooler ⇒ Rep. gr. 21 ; Charge air system with turbocharger .
– Then install starter and secure with lower bolt ⇒ Electrical system; Rep. gr. 27 ; Starter .
– Secure wiring retainer to lower starter bolt.
– Install upper starter bolt; attach connector and wiring to starter ⇒ Electrical system; Rep. gr. 27 ; Starter .

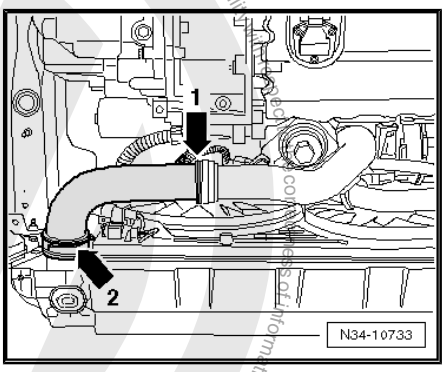

Protected by copyright. Copying for private or commercial purposes, in part or in whole, is not permitted unless authorised by Volkswagen AG. Volkswagen AG does not guarantee or accept any liability with respect to the correctness of information in this document. Copyright by Volkswagen AG.

Downloaded from www.Manualslib.com manuals search engine

– Attach earth strap -1- to upper starter bolt.
– Push connector -2- onto reversing light switch -F4- .

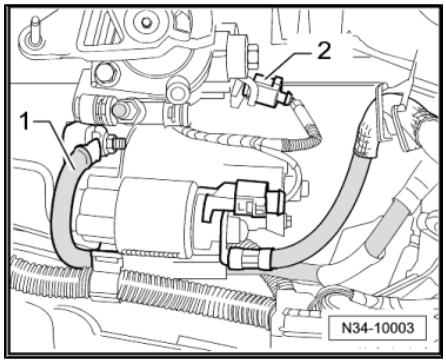

– Gearboxes for vehicles with start-stop system: join connector -arrow- to gearbox neutral position sender -G701- .
– Push pipe/hose line or plastic line -A- to stop into slave cylinder breather and press down clip -arrow-.

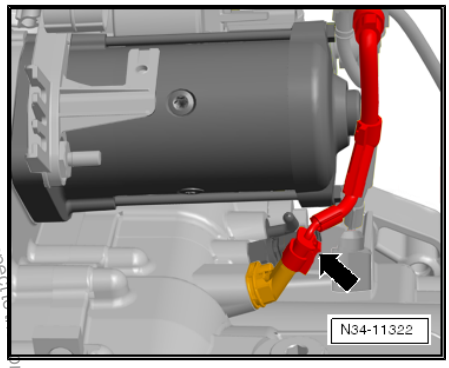

– Test line by tugging on it.
– Remove hose clamp -3094- from supply hose.
– After removing hose clamp -3094- , return supply hose to its original shape, if necessary.
– Bleed clutch system ⇒ page 37 .

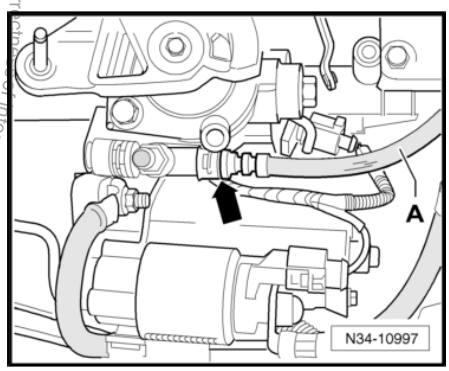

– Check for correct installation position of vacuum hose for brake system, install vacuum hose if necessary ⇒ Rep. gr. 47 .
– Bolt selector cable support brackets to gearbox and tighten bolts and nuts -arrows- to specified torque ⇒ Item 6 (page 71) and ⇒ Item 10 (page 71) .
– Insert gate selector cable in cable end-piece.

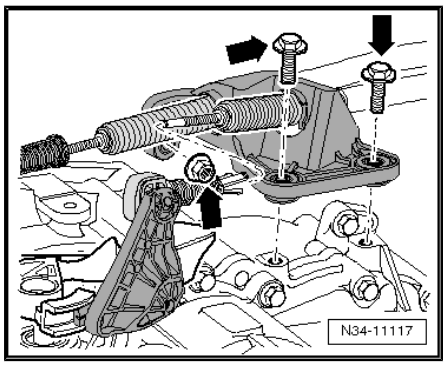

Copyright by Volkswagen AG. Volkswagen AG does not guarantee or accept any liability with respect to the correctness of information in this document. Copying for private or commercial purposes, in part or in whole, is not permitted unless authorised by Volkswagen AG.

Downloaded from www.Manualslib.com manuals search engine

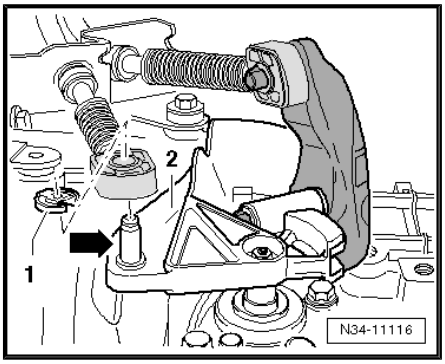

– Spread a small amount of grease on pin -arrow- of gearbox selector lever -2-.

Allocate grease using ⇒ Electronic parts catalogue (ETKA) .

– Renew securing clip -1- each time it is removed.
– Adjust selector mechanism ⇒ page 82 .
– Install battery tray, battery cover and battery ⇒ Electrical system; Rep. gr. 27 ; Removing and installing battery .
– If complete air filter housing was removed, install it ⇒ Rep. gr. 23 .
– If necessary, install engine cover.
– Connect battery and follow procedure after connecting battery ⇒ Electrical system; Rep. gr. 27 ; Disconnecting and connecting battery .
– Check gear oil ⇒ page 126 .
– Install lower part of front left wheel housing liner ⇒ General body repairs, exterior; Rep. gr. 66 ; Wheel housing liner .
– Install noise insulation ⇒ General body repairs, exterior; Rep. gr. 50 ; Noise insulation .

For vehicles with front vehicle level sender -G78- , check headlight adjustment ⇒ Electrical system; Rep. gr. 94 ; Lights, lamps, switches - exterior .

2.4 Specified torques

Gearbox to engine

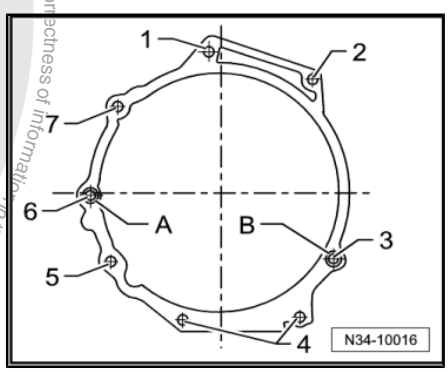

Item	Bolt	Quantity	Nm
1	M12 x 55 ♦ With short M8 stud	1	80
2	M12 x 55 ♦ With long M8 stud	1	80
3	M12 x 65	1	80
4	M10 x 50	2	40
5	M10 x 105	1	40
6	M12 x 165 ♦ With short M8 stud ♦ Additionally, starter to gearbox	1	80

Protected by copyright. Copying for private or commercial purposes, in part or in whole, is not permitted unless authorised by Volkswagen AG. Volkswagen AG does not guarantee or accept any liability with respect to the correctness of information in this document. Copyright by Volkswagen AG.

Downloaded from www.Manualslib.com manuals search engine

Item	Bolt	Quantity	Nm
7	M12 x 165 ♦ With short M8 stud ♦ Additionally, starter to gearbox	1	80
-	M6 x 8 ♦ Small flywheel cover plate (not on all engines)	1	10

Protected by copyright. Copying for private or commercial purposes, in part or in whole is not permitted unless authorised by Volkswagen AG. Volkswagen AG does not guarantee or accept any liability with respect to the correctness of information.

Items -A- and -B-: dowel sleeves

– Renew bolts -1- to -5-.

Small cover plate for flywheel on intermediate plate: 10 Nm.

Gearbox bracket -1- to gearbox.

– Renew bolts.

Bolts -arrows-: 60 Nm and turn 90° further.

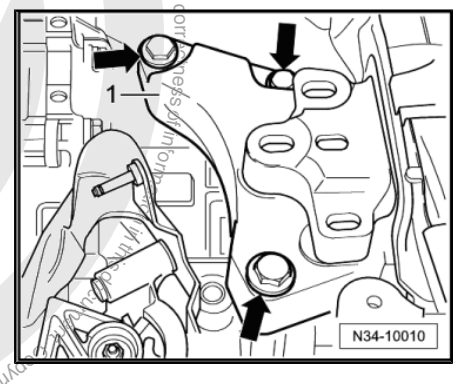

Gearbox to body

– Renew bolts.

Bolts -arrows-: 60 Nm and turn 90° further.

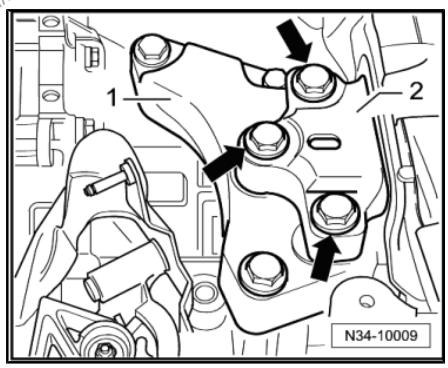

Note

Install engine and gearbox mounting free of tension ⇒ Rep. gr. 10 ; Removing and installing engine .

Downloaded from www.Manualslib.com manuals search engine

3 Removing and installing gearbox, vehicles with petrol engine

3.1 Removing gearbox

Special tools and workshop equipment required

- Support bracket -10 - 222 A-
- Adapter -10-222 A /8-
- Adapter -10-222 A /3-
- Adapter -10-222 A /18-
- Gearbox support -3282-

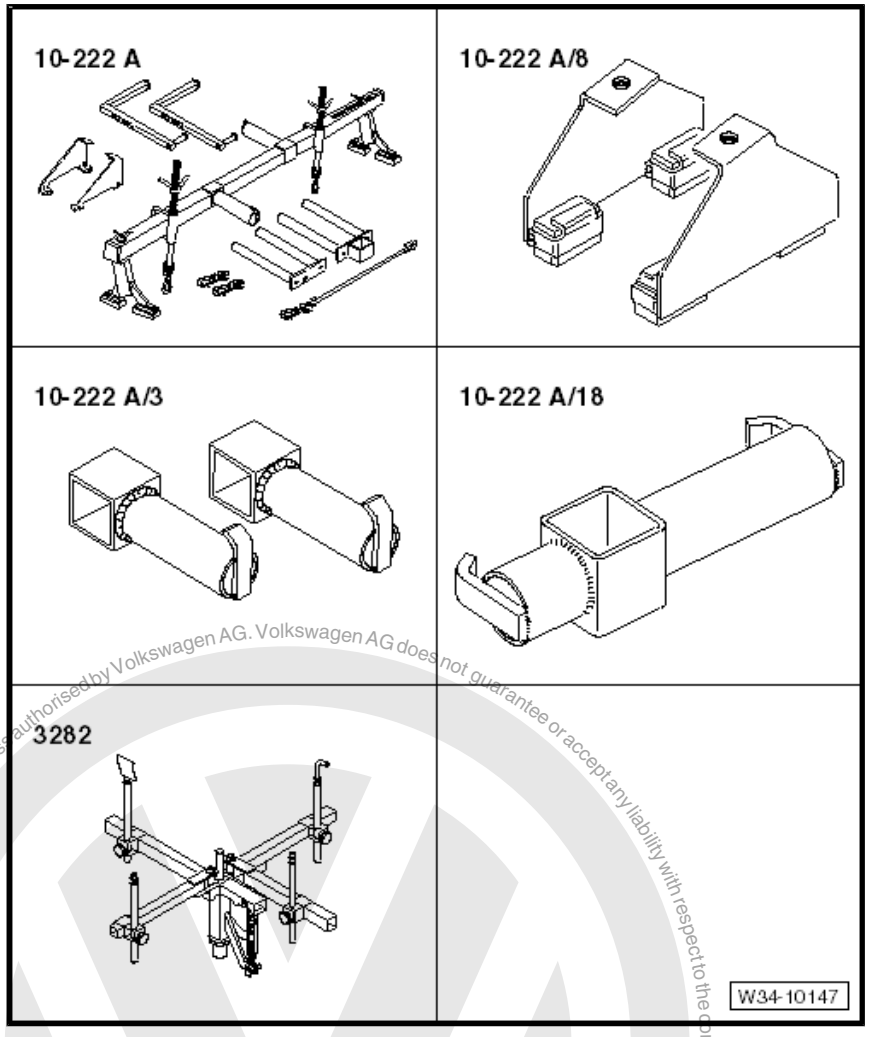

Protected by copyright. Copying for private or commercial purposes, in part or in whole, is not permitted unless authorised by Volkswagen AG. Volkswagen AG does not guarantee or accept any liability with respect to the correctness of information in this document. Copyright by Volkswagen AG.

Downloaded from www.Manualslib.com manuals search engine

- Support elements for gearbox (determine when setting adjustment plate on gearbox support)
- Adjustment plate -3282/33-
- Gearbox lifting tackle -3336- for transporting gearbox
- Torque wrench -V.A.G 1331-
- Torque wrench -V.A.G 1332-
- Engine and gearbox jack -V.A.G 1383 A-

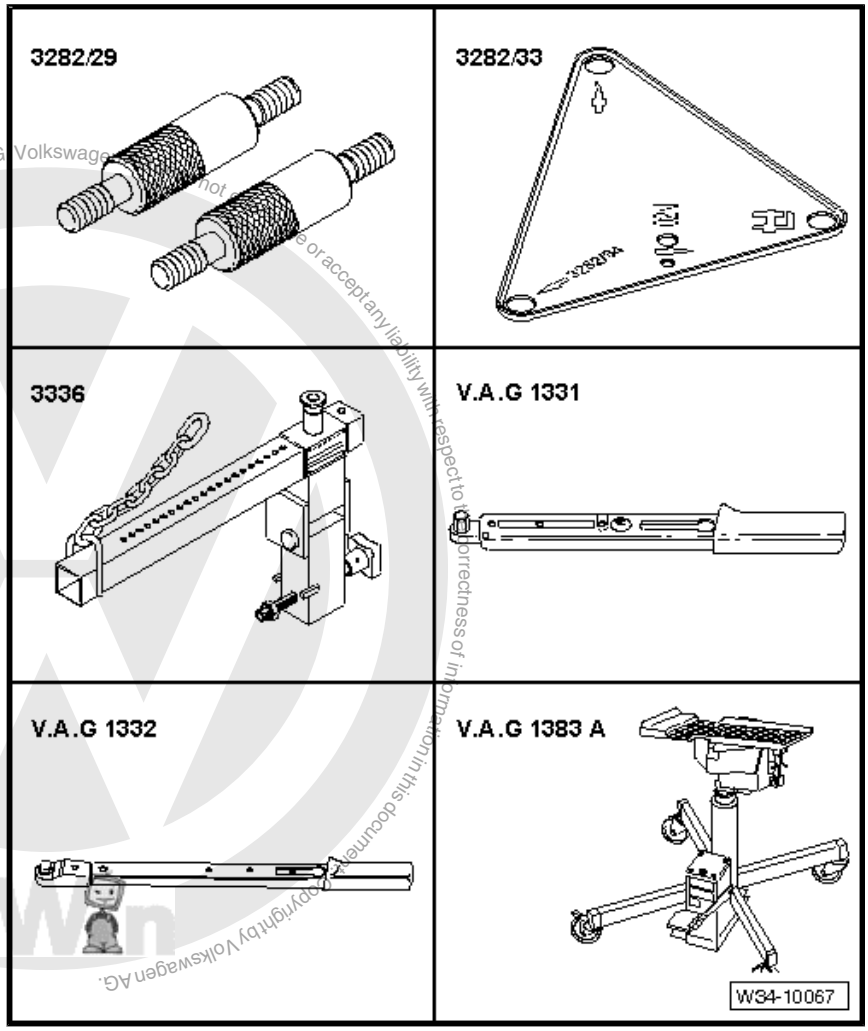

Protected by copyright. Copying for private or commercial purposes, in part or in whole is not permitted unless authorised by Volkswagen AG. Volkswagen AG does not guarantee or accept any liability with respect to the correctness of information in this document. Copyright by Volkswagen AG.

Downloaded from www.Manualslib.com manuals search engine

- 2 x brackets -T10346-
- Engine support -3300 A-
- Adapter -VW 771/40-
- Hose clamps to 25 mm -3094-
- Grease for clutch plate splines -G 000 100-
- Allocate grease using ⇒ Electronic parts catalogue (ETKA) .
- Flange bolt M6 X 20.
- Flange bolt M6 X 80
- Hexagon head bolt M10 x 20

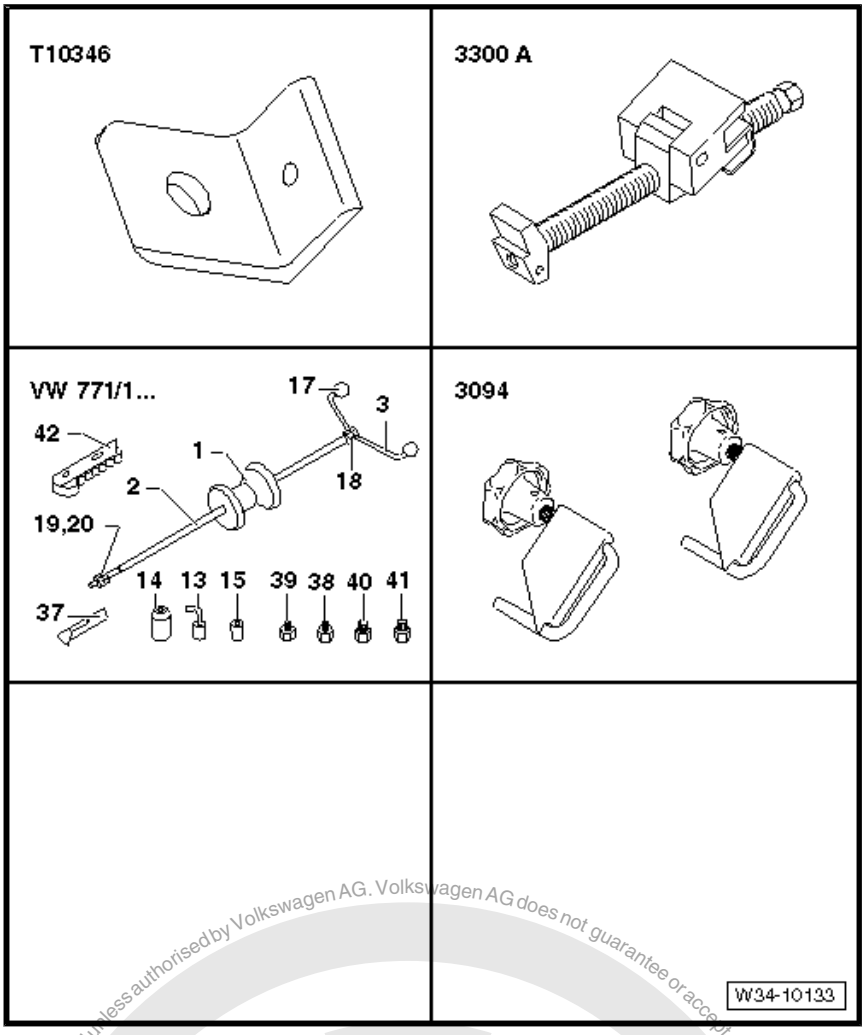

At a later point, support bracket -10-222 A- will be put onto longitudinal members with adapters -10 - 222 A /8- .

- To prevent damage to edges of wings, cover bottom area of both adapters -10 - 222 A /8- with self-adhesive fabric tape -arrow- ⇒ Electronic parts catalogue (ETKA chemical substances) .

– First check whether a coded radio is fitted. If so, obtain anti-theft code.

– With ignition switched off, disconnect battery earth strap ⇒ Electrical system; Rep. gr. 27 ; Disconnecting and connecting battery .

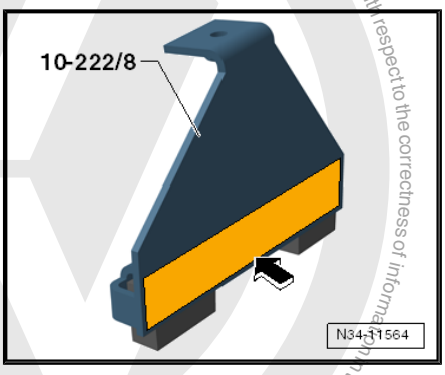

At a later point, the support bracket -10-222 A- will be connected to the lifting eyes of engine.

– If engine cover blocks access, remove engine cover.

– Remove complete air filter housing if it is located close to the battery ⇒ Rep. gr. 24 ; Repairing injection system .

– Remove battery, battery cover and battery tray ⇒ Electrical system; Rep. gr. 27 ; Removing and installing battery .

Protected by copyright. Copying for private or commercial purposes, in part or in whole, is not permitted unless authorised by Volkswagen AG. Volkswagen AG does not guarantee or accept any liability with respect to the correctness of information in this document. Copyright by Volkswagen AG.

Downloaded from www.Manualslib.com manuals search engine

– Remove securing clip -1- for gear selector cable from gearbox selector lever -2- and pull cable off pin -arrow-.

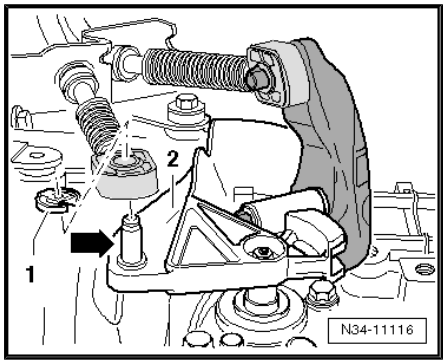

– Releasing cable end-piece from gate selector cable

• To avoid damage to gate selector cable, separate cable end-piece from gate selector cable before removal.

– Pull locking mechanism forward to stop in -direction of arrow 1- and then lock by turning to left in -direction of arrow 2-.

– Then push relay lever forwards (-in direction of arrow 3-).

– The relay lever is removed together with the cable end-piece at a later point.

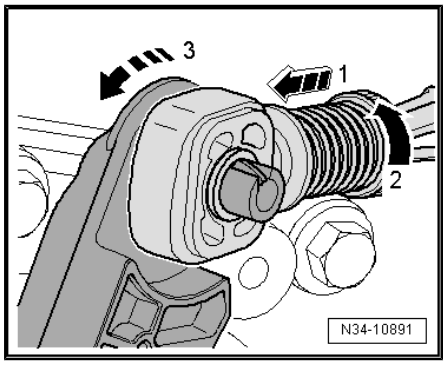

– Remove cable support bracket from gearbox -arrows-, lay to side and secure with wire.

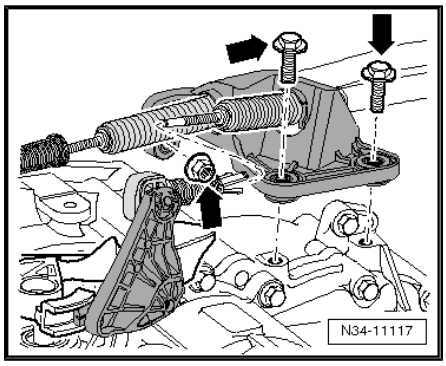

LHD

– Clamp off supply hose to master cylinder using hose clamp -3094- .

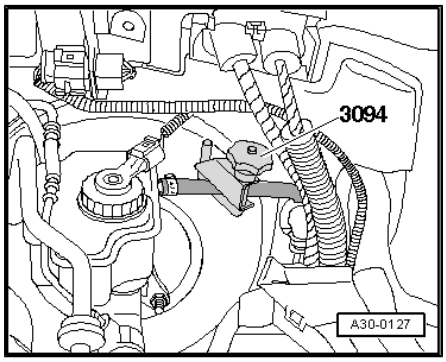

Protected by copyright. Copying for private or commercial purposes, in part or in whole, is not permitted unless authorised by Volkswagen AG. Volkswagen AG does not guarantee or accept any liability with respect to the correctness of information in this document. Copyright by Volkswagen AG.

Downloaded from www.Manualslib.com manuals search engine

Right-hand drive

– Clamp off hose of pipe/hose line -A- to slave cylinder using hose clamp -3094- .

Continuation for all

– Pull out clip -arrow- for pipe/hose line or plastic line to stop.

– Pull pipe/hose line or plastic line out from slave cylinder bleeder and seal.

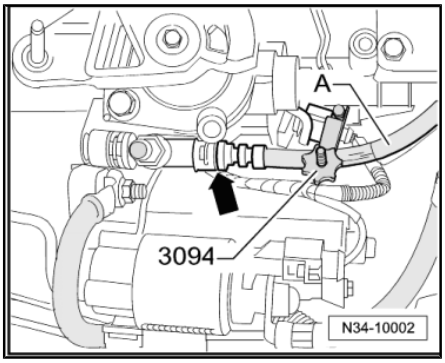

> ⚠ **Caution**
>
> ***Do not operate clutch pedal any more.***

– Remove earth strap -1- from top starter bolt.

– Separate electrical connector -2- for reversing light switch -F4- .

– Remove connector and wire from starter.

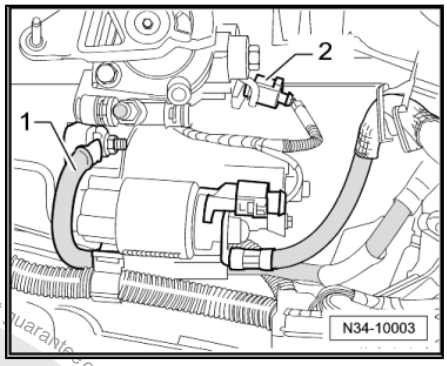

– Remove upper engine/gearbox connecting bolts -arrows-.

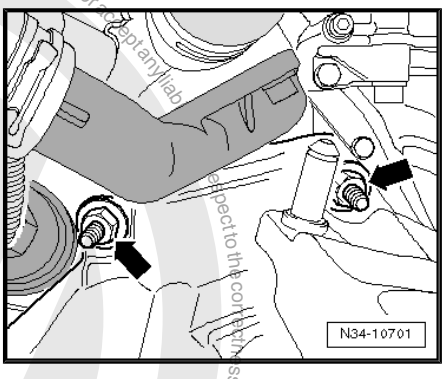

– Then remove upper securing bolt on starter.

– Bolt bracket -T10346- to rear of the 3 mounting holes for battery tray.

– To do this, use a collar bolt M 6 x 80 or a securing bolt for battery tray.

– Remove both foam pieces from upper edge of left and right wings ⇒ Body, front; Rep. gr. 50 .

– If there are hose and cable connections in area of engine support eye for support bracket -10 - 222 A- , remove these now.

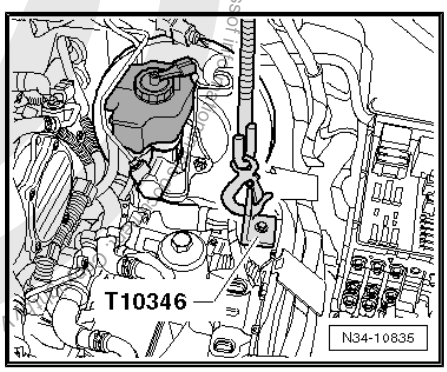

Protected by copyright. Copying for private or commercial purposes, in part or in whole, is not permitted unless authorised by Volkswagen AG. Volkswagen AG does not guarantee or accept any liability in respect to the correctness of the information.
Copyright by Volkswagen AG.

Downloaded from www.Manualslib.com manuals search engine

– Set up support bracket -10-222 A- in front of bonnet support.
– Use:
♦ Adapter -10-222 A /3-
♦ Adapter -10-222 A /8-
♦ Adapter -10-222 A /18-
– Position adapter -10-222 A /8- :
• On upper longitudinal carrier, directly before the elevation (-arrow 1-) next to bolt (-arrow 2-)
– Connect engine and bracket -T10346- to support bracket .
– Take up weight of engine/gearbox assembly and support bracket on spindles.

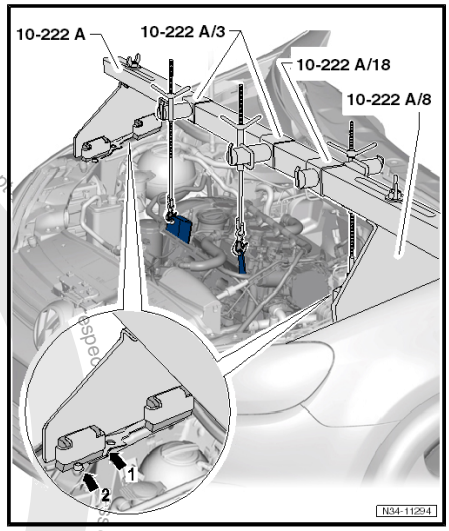

The left drive shaft will be removed in a later step.

– With vehicle standing on its wheels, loosen front left flange bolt -arrow- 90° at most, or wheel bearing will be damaged ⇒ Running gear, axles, steering; Rep. gr. 40 ; Removing and installing drive shafts .
– Remove noise insulation ⇒ General body repairs, exterior; Rep. gr. 50 ; Noise insulation .
– Remove lower part of front left wheel housing liner ⇒ General body repairs, exterior; Rep. gr. 66 ; Wheel housing liner .

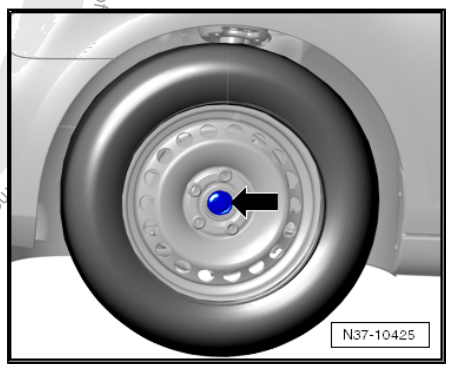

– If front vehicle level sender -G78- is present, unbolt it from transverse link ⇒ Rep. gr. 40 ; Removing and installing front vehicle level sender -G78- .
– Remove bracket from starter.
– Remove starter ⇒ Electrical system; Rep. gr. 27 ; Starter .
– Remove left charge air hose -arrow 1- and -arrow 2- and charge air pipe from engine ⇒ Rep. gr. 21 ; Charge air system with turbocharger .

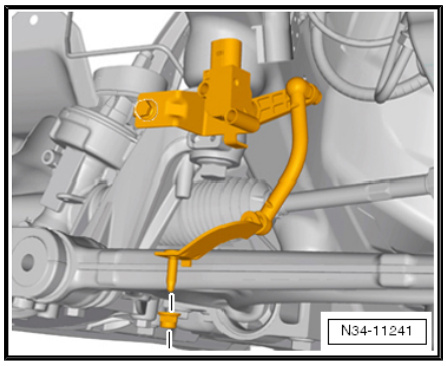

– Remove right charge air hose -arrow 2- ⇒ Rep. gr. 21 ; Charge air system with turbocharger

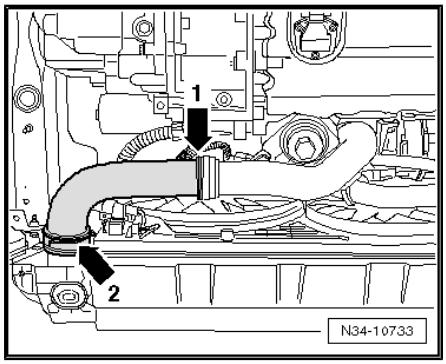

Downloaded from www.Manualslib.com manuals search engine

– Remove cowling -arrow- together with radiator fans ⇒ Rep. gr. 19 ; Parts of cooling system .

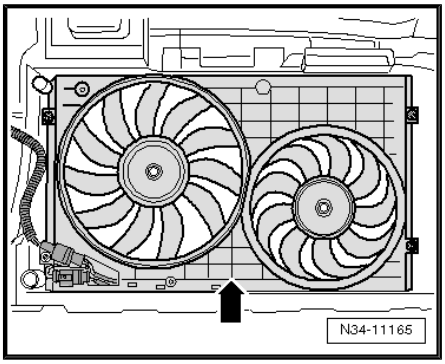

– Disconnect front exhaust pipe from turbocharger (-arrow-) ⇒ Rep. gr. 26 ; Removing and installing parts of exhaust system and secure it.

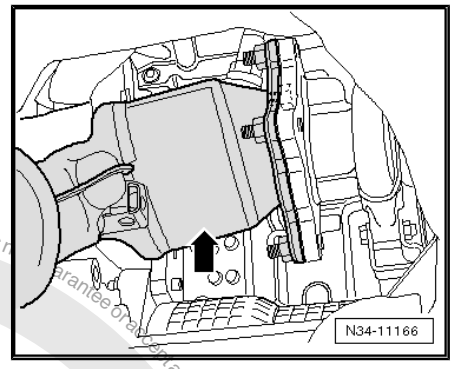

– Remove pendulum support.

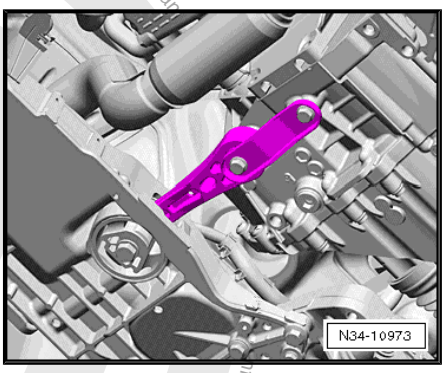

– Pull connector -1- off oil level and oil temperature sender - G266- .
– Remove left coupling rod from anti-roll bar and lay to side ⇒ Running gear, axles, steering; Rep. gr. 40 ; Repairing front wheel suspension .
– Remove left drive shaft ⇒ Running gear, axles, steering; Rep. gr. 40 ; Removing and installing drive shafts .

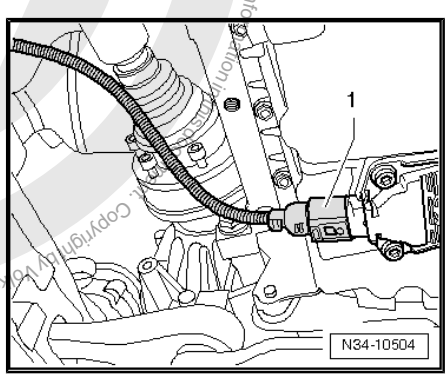

Protected by copyright. Copying for private or commercial purposes, in part or in whole, is not permitted unless authorised by Volkswagen AG. Volkswagen AG does not guarantee or accept any liability with respect to the correctness of information in this document. Copyright by Volkswagen AG.

Downloaded from www.Manualslib.com manuals search engine

– Remove drive shaft heat shield, if present -arrows- ⇒ Running gear, axles, steering; Rep. gr. 40 ; Repairing drive shafts .

– Remove right drive shaft from gearbox, raise and secure it ⇒ Running gear, axles, steering; Rep. gr. 40 ; Removing and installing drive shafts .

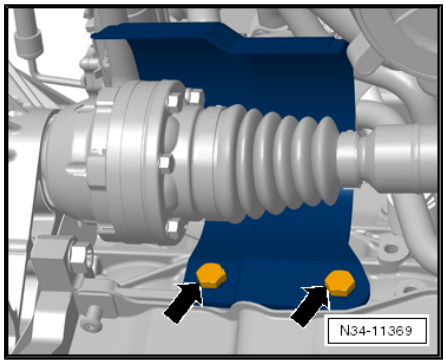

– If small cover plate -A- for flywheel is present, remove it -arrows-.

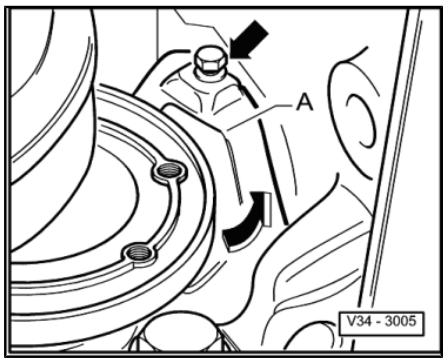

– Remove hexagon bolts -arrows- on left engine/gearbox mounting -2- from bracket -1-.

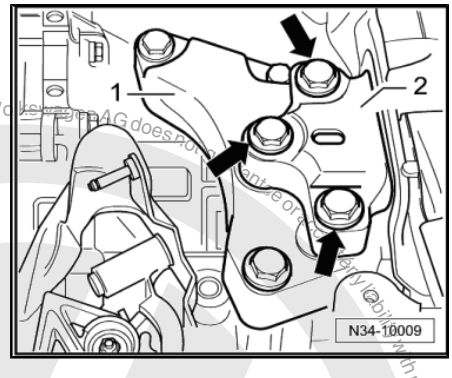

– Lower gearbox about 60 mm, dimension -a-, by adjusting spindles attached to engine.

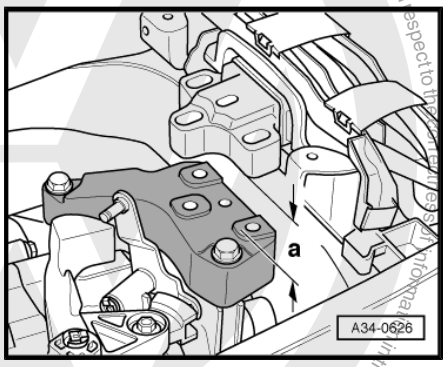

Note

Observe connecting lines, hoses and radiator when moving engine/gearbox assembly.

Protected by copyright. Copying for private or commercial purposes, in part or in whole, is not permitted unless authorised by Volkswagen AG. Volkswagen AG does not guarantee or accept any liability with respect to the correctness of information in this document. Copyright by Volkswagen AG.

Downloaded from www.Manualslib.com manuals search engine

– Remove bracket -1- from gearbox -arrows-.

– Remove relay lever together with cable end-piece ⇒ page 75 .

– Remove gearbox selector lever from selector shaft.

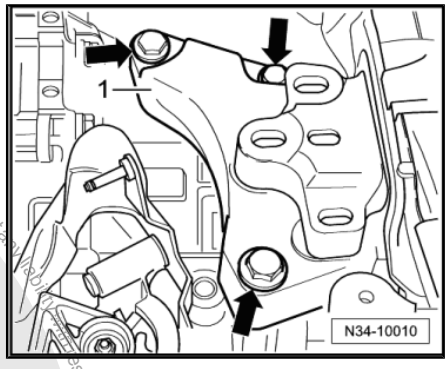

– Remove engine/gearbox connecting bolt -1-.

Note

Loosen engine/gearbox connecting bolts -2- and leave them installed just hand-tight.

– Attach bracket -T10346- with bolt -1- to left threaded hole in subframe.

– In the process, position bracket -T10346- at the same angle as the engine.

-1- = Flange bolt M6 x 20.

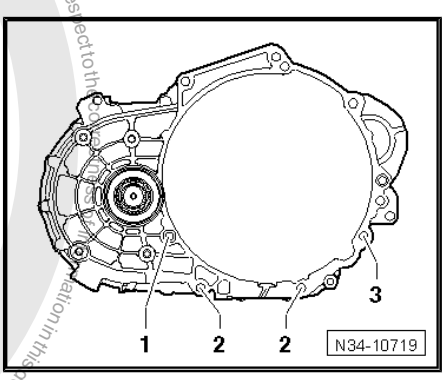

– Secure engine support -3300 A- to bracket -T10346- .

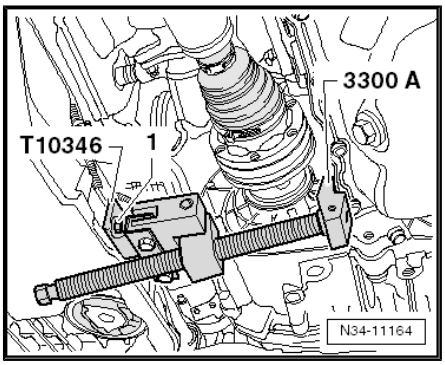

– Press engine forwards using spindle of engine support -3300 A- . In the process, observe the following points in particular:

- The air conditioning compressor -2- must not contact -arrow- the refrigerant line -1-.
- The alternator must not contact the refrigerant line.
- The pressure pipe must not contact the radiator.

To remove gearbox „02Q“, set up gearbox support -3282- with adjustment plate -3282/33- .

– Insert gearbox support -3282- in engine and gearbox jack -V.A.G 1383 A- .

– Align arms of gearbox support according to holes in adjustment plate .

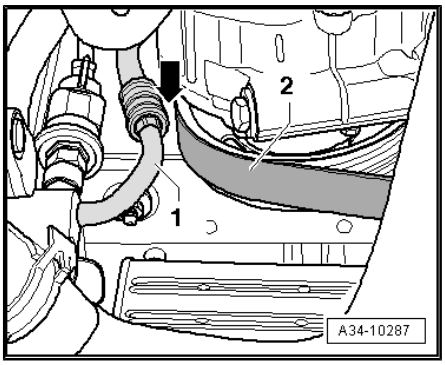

Downloaded from www.Manualslib.com manuals search engine

– Attach support elements -A- to adjustment plate as illustrated.
– Screw in pin -3282/29- instead of support element -C-.
– Position engine and gearbox jack -V.A.G 1383 A- under vehicle. Arrow -B- on adjustment plate points in direction of vehicle travel.
– Align adjustment plate parallel to gearbox.

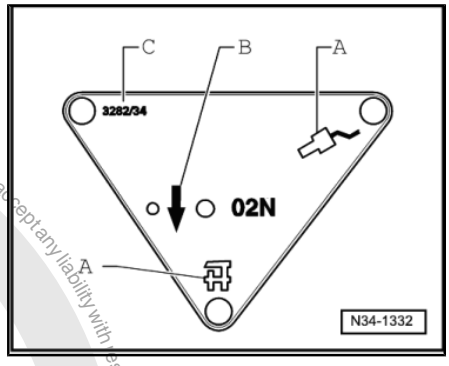

– Secure adapter -VW 771/40- in threaded hole of gearbox housing as shown in figure.
– Then screw pin -3282/29- into hole on gearbox for securing bolt of pendulum support.
– Secure gearbox to gearbox support -3282- using bolt (M10x20) -A-.

Pin -B- must lie flush with guide from gearbox support -3282- at bottom -arrow-.

– Remove connecting bolt -C- and lower connecting bolts.
– Press gearbox away from engine, off dowel sleeves.

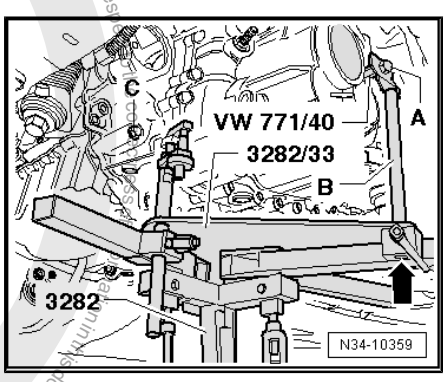

Right flange shaft -1- must be guided past bolt hole of engine -2-.

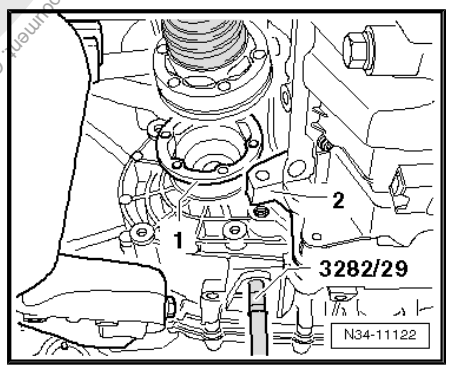

Then the right flange shaft -1- must be guided past the notch -arrow- in the intermediate plate and the flywheel.

– Tilt gearbox in area of differential using spindles of gearbox support -3282- .
• Differential must face upwards.
– Guide gearbox with differential over subframe -A- and swing out.

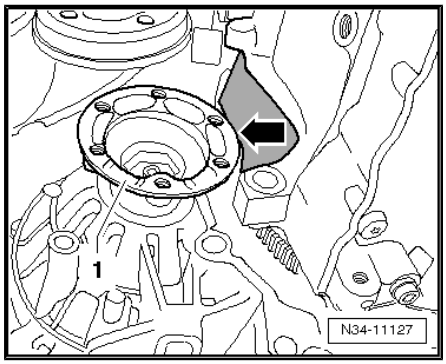

Downloaded from www.Manualslib.com manuals search engine

– If necessary, turn gearbox further upwards near differential using spindles of gearbox support -3282- .

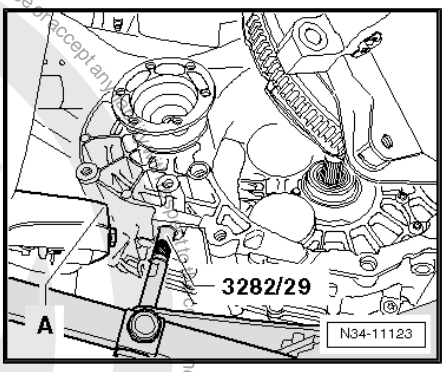

– Swivel gearbox further out and carefully lower.

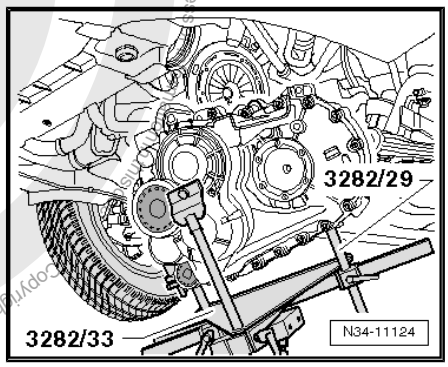

Note

Be careful of all lines when lowering gearbox.

3.2 Transporting gearbox

Special tools and workshop equipment required

♦ Gearbox mounting support -3336-

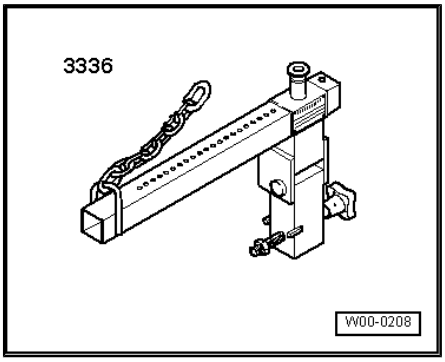

♦ Workshop hoist -VAS 6100-

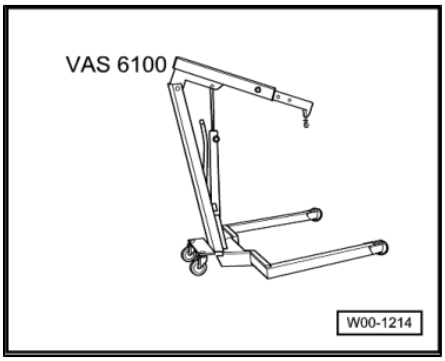

Downloaded from www.Manualslib.com manuals search engine

– Bolt gearbox lifting tackle -3336- to clutch housing.

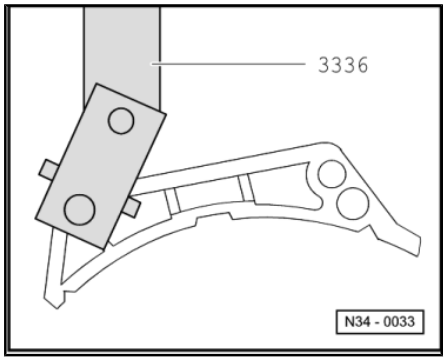

– Adjust support beam on sliding piece using locking pin -arrow-.

  Number of holes visible = 6.

– Lift gearbox using workshop crane and gearbox lifting tackle -3336- .

– Set gearbox aside, for example in a transport container.

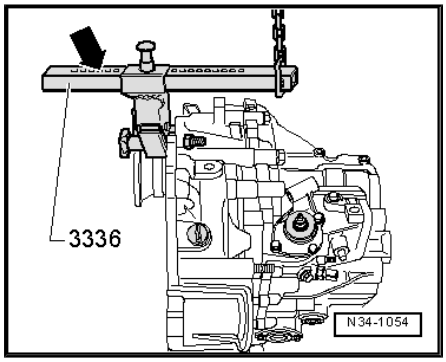

3.3 Installing gearbox

Protected by copyright. Copying for private or commercial purposes, in part or in whole, is not permitted unless authorised by Volkswagen AG. Volkswagen AG does not guarantee or accept any liability with respect to the correctness of information in this document. Copyright by Volkswagen AG.

Note

- *Refer to procedure „Removing gearbox“ for required special tools* *⇒ page 106* *.*
- *Renew self-locking nuts and bolts.*
- *Renew bolts which must be tightened further to a torque angle.*
- *All cable ties which were opened or cut during removal must be renewed at the same points.*
- *Clean input shaft splines and, on used clutch plates, clean hub splines; remove corrosion and apply only a very thin coat of clutch plate spline grease -G 000 100- to splines. Then move clutch plate to and fro on input shaft until hub moves freely on shaft. Remove excessive grease.*

– If the gearbox is to be renewed, the gearbox selector lever and relay lever must be transferred to the new gearbox.

– All threaded holes into which self-locking bolts are to be screwed must be cleaned of residual locking fluid carefully with a thread tap.

– Check whether dowel sleeves for aligning engine and gearbox are fitted in cylinder block and install if necessary.

If dowel sleeves are not fitted, difficulties shifting gears, clutch problems and possible noises from the gearbox (rattling of gears which are not engaged) could occur.

Downloaded from www.Manualslib.com manuals search engine

Protected by copyright. Copying for private or commercial purposes, in part or in whole, is not permitted unless authorised by Volkswagen AG. Volkswagen AG does not guarantee or accept any liability with respect to the correctness of information in this copy.

– Ensure that intermediate plate is hooked into sealing flange and pushed onto dowel sleeves -arrows-.

– Check release bearing for wear. If necessary, renew slave cylinder with release bearing ⇒ page 40 .

– Attach bracket -T10346- with bolt -1- to left threaded hole in subframe.

– In the process, position bracket -T10346- at the same angle as the engine.

-1- = Flange bolt M6 x 20.

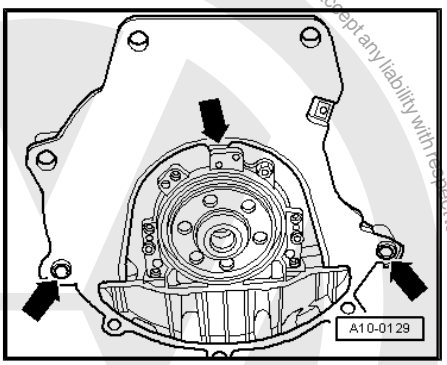

– Secure engine support -3300 A- to bracket -T10346- .

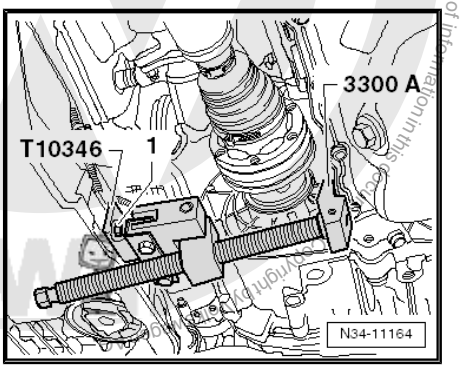

– Press engine forwards using spindle of engine support -3300 A- . In the process, observe the following points in particular:

• The air conditioning compressor -2- must not contact -arrow- the refrigerant line -1-.

• The alternator must not contact the refrigerant line.

• The pressure pipe must not contact the radiator.

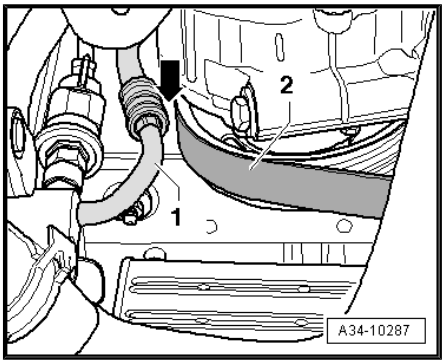

To install gearbox „02Q“, set up gearbox support -3282- with adjustment plate -3282/33- .

– Align arms of gearbox support according to holes in adjustment plate .

– Attach support elements -A- to adjustment plate as illustrated.

– Screw in pin -3282/29- instead of support element -C-.

– Place gearbox on engine and gearbox jack -V.A.G 1383 A- .

– Align adjustment plate and gearbox parallel to one another.

– Screw pin -3282/29- into hole on gearbox for securing bolt of pendulum support.

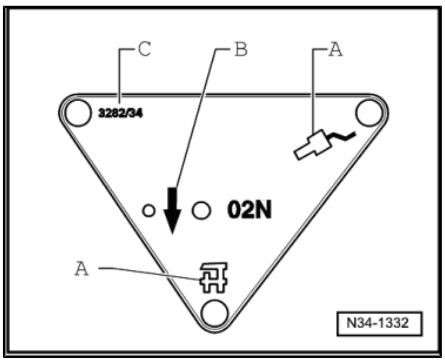

Downloaded from www.Manualslib.com manuals search engine

– Secure adapter -VW 771/40- in threaded hole of gearbox housing as shown in figure.

– Secure gearbox to gearbox support -3282- using bolt (M10x20) -A-.

Pin -B- must lie flush with guide from gearbox support -3282- at bottom -arrow-.

– Position engine and gearbox jack -V.A.G 1383 A- under vehicle. Arrow on adjustment plate points in direction of vehicle travel.

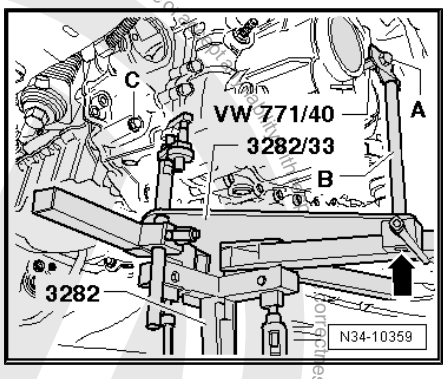

Note

Be careful of all lines when installing gearbox.

– Now turn gearbox in area of differential -in direction of arrow- using spindles of gearbox support -3282- .

– Then carefully raise gearbox.

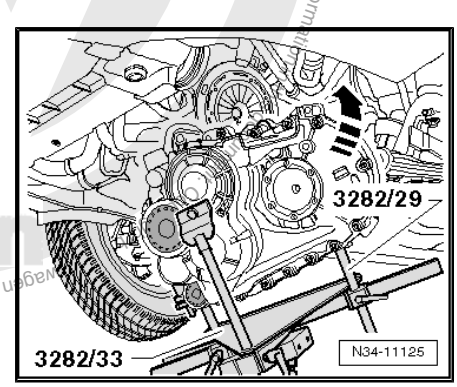

– Guide gearbox with differential -A- over subframe.

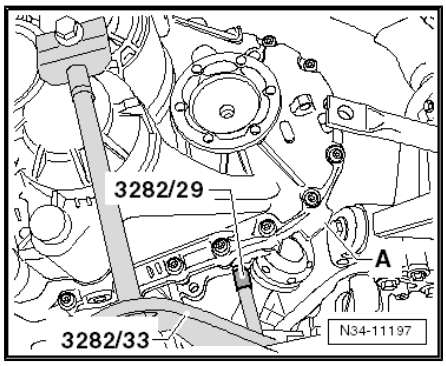

– Observe longitudinal member -arrows-.

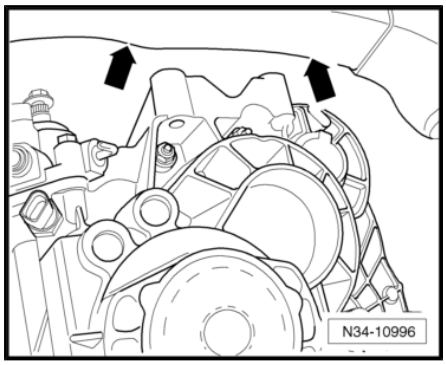

Downloaded from www.Manualslib.com manuals search engine

– Guide gearbox with differential over subframe -A- -in direction of arrow-.

– Swing rear of gearbox towards subframe.

• Then the right flange shaft -1- must be guided past the flywheel and the notch -arrow- in the intermediate plate.

– Then turn gearbox to installation position via spindles of gearbox support -3282- .

– Align gearbox on engine dowel sleeves and join.

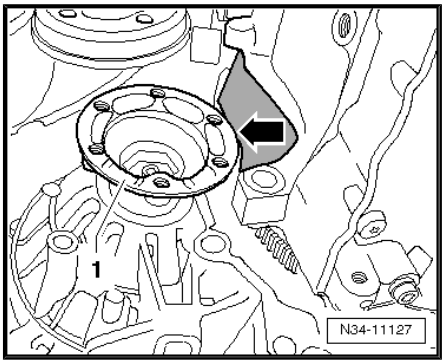

– Screw in engine/gearbox connecting bolt -C- and tighten to specified torque ⇒ page 124 .

– Screw in engine/gearbox connecting bolt -arrow- and tighten to specified torque ⇒ page 124 .

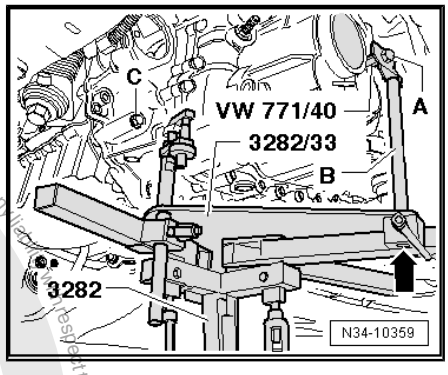

– Remove engine support -3300 A- and bracket -T10346- .

– Screw in lower engine/gearbox securing bolts and tighten to specified torque ⇒ page 124 .

– After bottom of gearbox and engine are bolted together, remove gearbox support -3282- from gearbox.

– Insert upper engine/gearbox securing bolts and tighten to torque specification ⇒ page 124 .

– Attach gearbox selector lever to selector shaft of gearbox ⇒ page 73 and tighten hexagon nut to specified torque ⇒ Item 17 (page 72) .

– Install relay lever together with cable end-piece ⇒ page 75 .

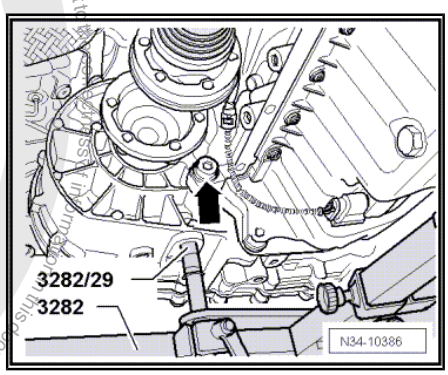

– Install bracket -1- on gearbox using new hexagonal bolts -arrows- and tighten to specified torque ⇒ page 124 .

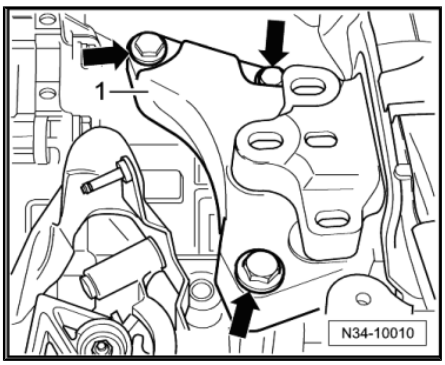

Protected by copyright. Copyright by Volkswagen AG. Volkswagen AG does not guarantee or accept any liability with respect to the accuracy of this document. Copyright by Volkswagen AG.

Downloaded from www.Manualslib.com manuals search engine

– Align engine and gearbox in installation position. To do this, raise sufficiently so that bracket -1- completely contacts left assembly mounting -2-.

– Screw new hexagon bolts -arrows- for left assembly mounting -2- into bracket -1- and tighten to specified torque ⇒ page 124 .

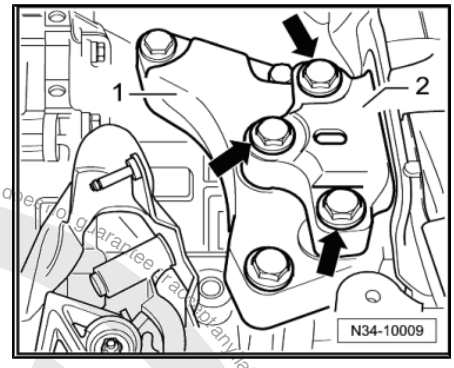

Note

Install engine and gearbox mounting free of tension ⇒ Rep. gr. 10 ; Removing and installing engine .

WARNING

Do not remove support bracket -10-222 A- until all bolts securing the assembly mounting have been tightened to specified torque.

– If small cover plate -A- for flywheel is present, install it -arrows- ⇒ page 124 .

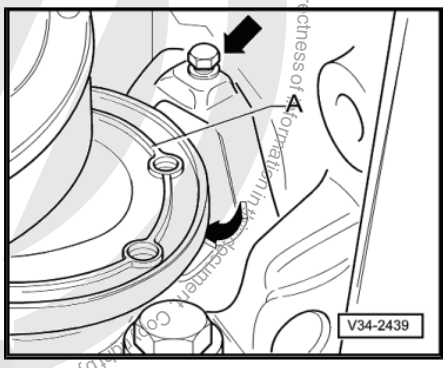

Note

- *There are threaded inserts, e.g. „HeliCoil“ in the bolting holes for the pendulum support.*
- *Identification: shoulder along beginning of thread -arrow-.*
- *Note corresponding securing bolts and specified torque ⇒ Running gear, axles, steering; Rep. gr. 40 ; Assembly overview - subframe, anti-roll bar, suspension links .*

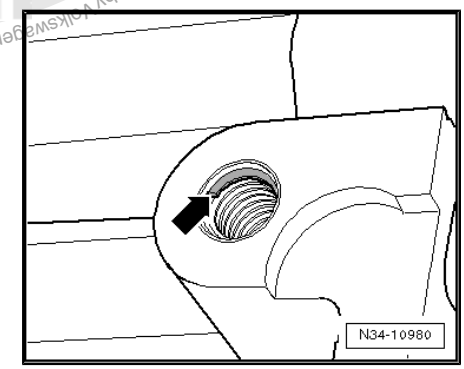

– Install pendulum support ⇒ Running gear, axles, steering; Rep. gr. 40 ; Assembly overview - Subframe, anti-roll bar, suspension links .

– Assemble exhaust system ⇒ Rep. gr. 26 ; Removing and installing parts of exhaust system .

– Then install drive shafts ⇒ Running gear, axles, steering; Rep. gr. 40 ; Removing and installing drive shafts .

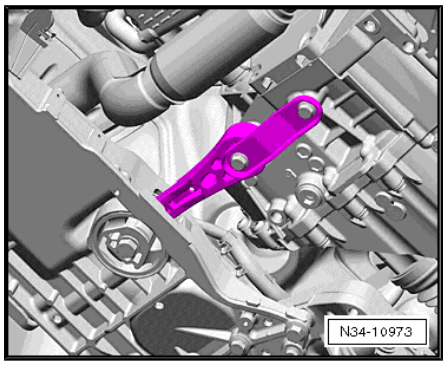

Protected by copyright. Copying for private or commercial purposes, in part or in whole, is not permitted unless authorised by Volkswagen AG. Volkswagen AG does not give a guarantee or accept any liability with respect to the correctness of information in this document. Copyright by Volkswagen AG.

Downloaded from www.Manualslib.com manuals search engine

– Install drive shaft heat shield, if present -arrows- ⇒ Running gear, axles, steering; Rep. gr. 40 ; Repairing drive shafts .
– Install left coupling rod ⇒ Running gear, axles, steering; Rep. gr. 40 ; Repairing front suspension .

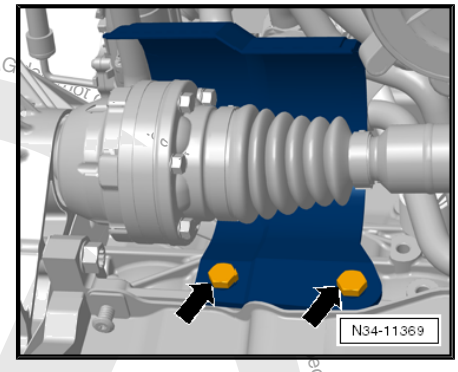

– If front vehicle level sender -G78- is present, bolt it onto transverse link ⇒ Rep. gr. 40 ; Removing and installing front vehicle level sender -G78-.

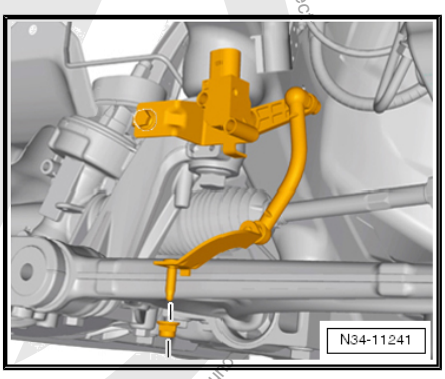

– Attach connector -1- to oil level and oil temperature sender -G266- .

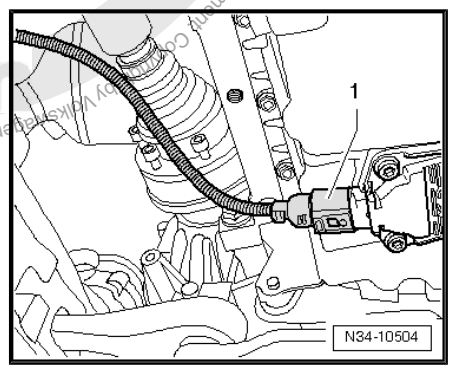

– Install cowling -arrow- together with radiator fans ⇒ Rep. gr. 19 ; Parts of cooling system .

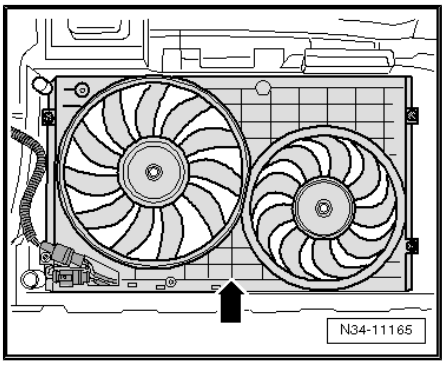

Protected by copyright. Copying for private or commercial purposes, in part or in whole, is not permitted unless authorised by Volkswagen AG. Volkswagen AG

Downloaded from www.Manualslib.com manuals search engine

– Fit charge air hoses -arrow 1- and -arrow 2- and charge air pipe on engine ⇒ Rep. gr. 21 ; Charge air system with turbo-charger .

– Then install starter and secure with lower bolt ⇒ Electrical system; Rep. gr. 27 ; Starter .

– Secure wiring retainer to lower starter bolt.

– Install upper starter bolt; attach connector and wiring to starter ⇒ Electrical system; Rep. gr. 27 ; Starter .

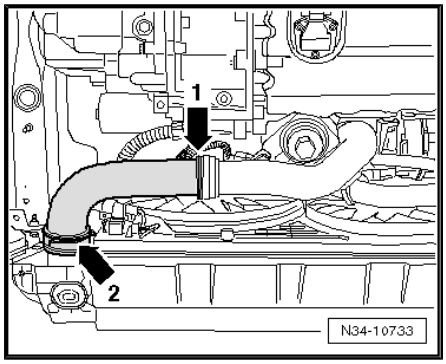

– Attach earth strap -1- to upper starter bolt.

– Push connector -2- onto reversing light switch -F4- .

– Push pipe/hose line or plastic line -A- to stop into slave cylinder breather and press down clip -arrow-.

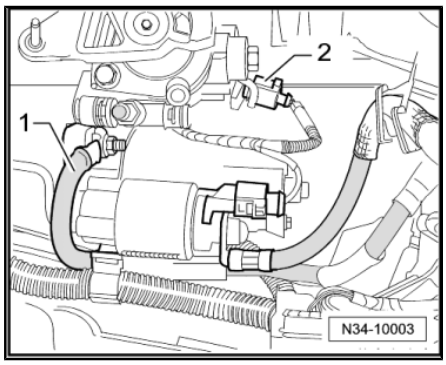

– Test line by tugging on it.

– Remove hose clamp -3094- from supply hose.

– After removing hose clamp -3094- , return supply hose to its original shape, if necessary.

– Bleed clutch system ⇒ page 37 .

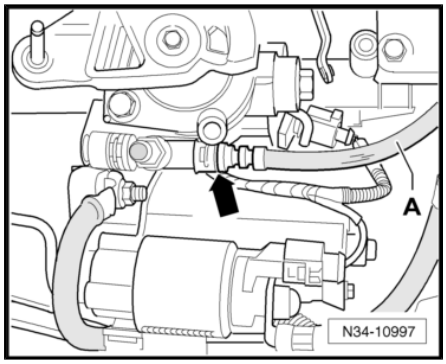

– Check for correct installation position of vacuum hose for brake system, install vacuum hose if necessary ⇒ Rep. gr. 47 .

– Bolt selector cable support brackets to gearbox and tighten bolts and nuts -arrows- to specified torque ⇒ Item 6 (page 71) and ⇒ Item 10 (page 71) .

– Insert gate selector cable in cable end-piece.

– Spread a small amount of grease on pin -arrow- of gearbox selector lever -2-.

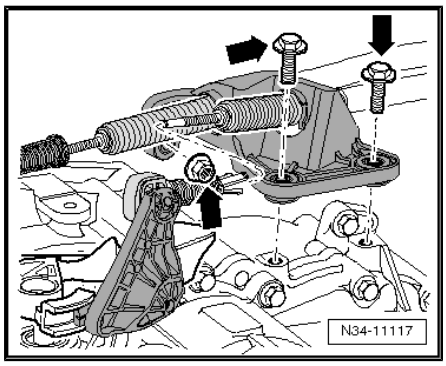

Protected by copyright. Copying for private or commercial purposes, in part or in whole, is not permitted unless authorised by Volkswagen AG. Volkswagen AG does not guarantee or accept any liability with respect to the correctness of information in this document. Copyright by Volkswagen AG.

Downloaded from www.Manualslib.com manuals search engine

Allocate grease using ⇒ Electronic parts catalogue (ETKA) .

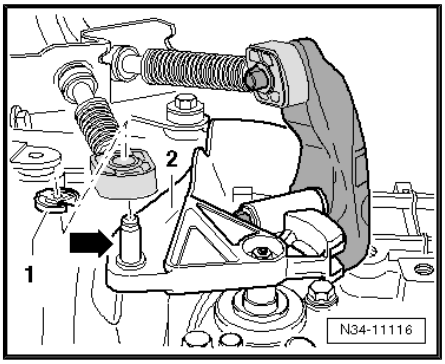

– Renew securing clip -1- each time it is removed.
– Adjust selector mechanism ⇒ page 82 .
– Install battery tray, battery cover and battery ⇒ Electrical system; Rep. gr. 27 ; Removing and installing battery .
– If removed, install complete air filter housing ⇒ Rep. gr. 24 ; Repairing injection system .
– Install plenum chamber cover with seal.

⇒ Glazing; Rep. gr. 64 ; Assembly overview - plenum chamber cover

– Set both foam pieces on upper edge of left and right wings ⇒ Body, front; Rep. gr. 50 .
– If necessary, install engine cover.
– Connect battery and follow procedure after connecting battery ⇒ Electrical system; Rep. gr. 27 ; Disconnecting and connecting battery .
– Check gear oil ⇒ page 126 .
– Install lower part of front left wheel housing liner ⇒ General body repairs, exterior; Rep. gr. 66 ; Wheel housing liner .
– Install noise insulation ⇒ General body repairs, exterior; Rep. gr. 50 ; Noise insulation .
– For vehicles with front vehicle level sender -G78- , check headlight adjustment ⇒ Electrical system; Rep. gr. 94 ; Lights, lamps, switches - exterior .

3.4 Specified torques

Gearbox to engine

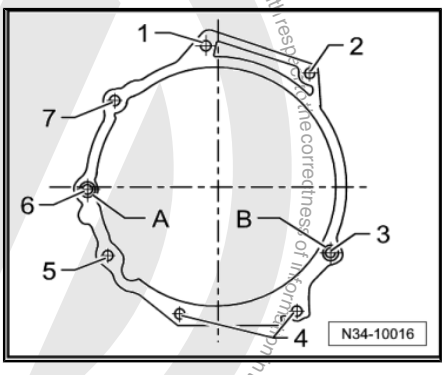

Item	Bolt	Quantity	Nm
1	M12 x 55 ♦ With short M8 stud	1	80
2	M12 x 55 ♦ With long M8 stud	1	80
3	M12 x 65	1	80
4	M10 x 50	2	40
5	M10 x 105	1	40
6	M12 x 165 ♦ With short M8 stud ♦ Additionally, starter to gearbox	1	80

Protected by copyright. Copying for private or commercial purposes, in part or in whole, is not permitted unless authorised by Volkswagen AG. Volkswagen AG does not guarantee or accept any liability with respect to the correctness of information in this document. Copyright by Volkswagen AG.

Downloaded from www.Manualslib.com manuals search engine

Item	Bolt	Quantity	Nm
7	M12 x 165 ♦ With short M8 stud ♦ Additionally, starter to gearbox	1	80
-	♦ M6 x 8 Small flywheel cover plate (not on all engines)	1	10

Items -A- and -B-: dowel sleeves

– Renew bolts -1- to -5-.

Small cover plate for flywheel on intermediate plate: 10 Nm.

Gearbox bracket -1- to gearbox.

– Renew bolts.

Bolts -arrows-: 60 Nm and turn 90° further.

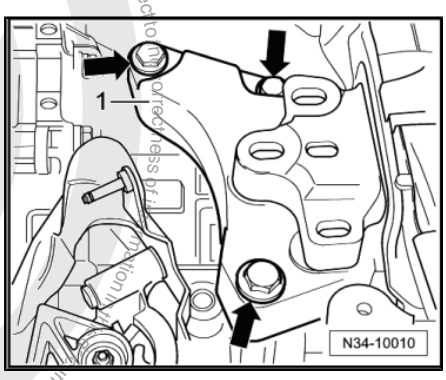

Gearbox to body

– Renew bolts.

Bolts -arrows-: 60 Nm and turn 90° further.

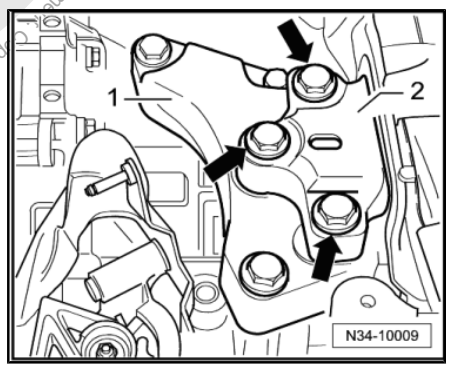

Note

Install engine and gearbox mounting free of tension ⇒ Rep. gr. 10 ; Removing and installing engine .

Protected by copyright. Copying for private or commercial purposes, in part or in whole, is not permitted unless authorised by Volkswagen AG. Volkswagen AG does not guarantee or accept any liability with respect to the correctness of information in this repair manual. Copyright by Volkswagen AG.

Downloaded from www.Manualslib.com manuals search engine

4 Checking gearbox oil

Special tools and workshop equipment required

- Torque wrench -V.A.G 1331-

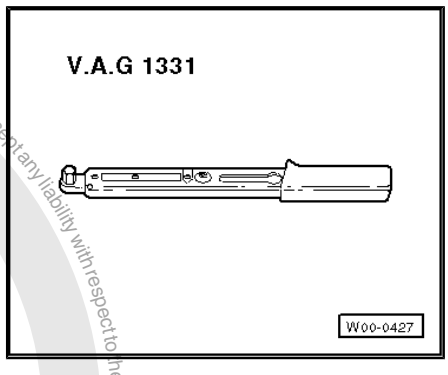

- Multi-point bit -3357-

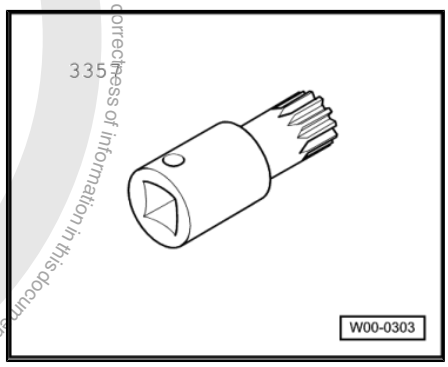

Volkswagen AG. Volkswagen AG does not guarantee or accept any liability with respect to the correctness of information in this document. Copyright by Volkswagen AG. Copyright. Copying for private or commercial purposes, in part or in whole, is not permitted unless authorised by Volkswagen AG.

Gearbox oil specification ⇒ Electronic parts catalogue „ETKA“ .

– Remove noise insulation ⇒ General body repairs, exterior; Rep. gr. 50 ; Noise insulation .

– To check gear oil, remove oil plug -arrow-.

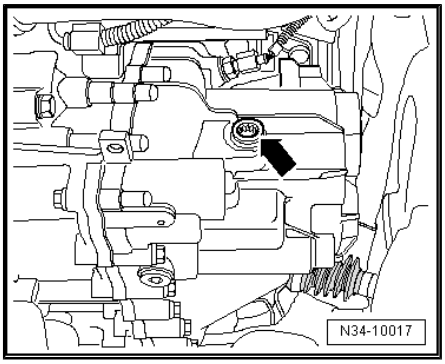

Oil level is correct when gearbox is filled to lower edge of filler hole.

– Screw in plug -arrow- with new seal.

– Tighten bolt -arrow- to specified torque ⇒ page 127 .

When filling with oil, note the following:

– Remove oil plug -arrow-.

– Fill with gear oil to lower edge of filler hole.

– Screw in plug -arrow- with new seal.

– Tighten bolt -arrow- to specified torque ⇒ page 127 .

– Install noise insulation ⇒ General body repairs, exterior; Rep. gr. 50 ; Noise insulation .

Downloaded from www.Manualslib.com manuals search engine

Various versions of oil filler and drain plugs

I - Oil filler or oil drain plug with multi-point socket head 45 Nm

II - Oil filler or oil drain plug with hexagon socket head 30 Nm

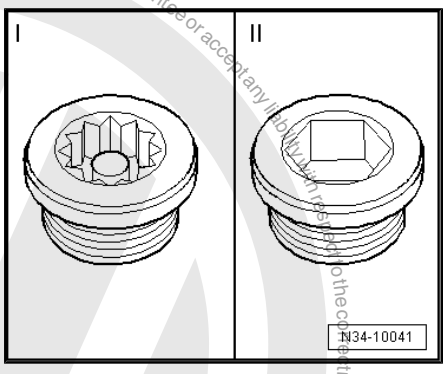

Protected by copyright. Copying for private or commercial purposes, in part or in whole, is not permitted unless authorised by Volkswagen AG. Volkswagen AG does not guarantee or accept any liability with respect to the correctness of information in this document. Copyright by Volkswagen AG.

Downloaded from www.Manualslib.com manuals search engine

5 Dismantling and assembling gearbox

5.1 Overview - rear final drive

1 - Clutch housing

2 - Reverse shaft

3 - Output shaft for 5th, 6th and reverse gears

4 - Slave cylinder with clutch release bearing

5 - Input shaft

6 - Output shaft for 1st through 4th gears

7 - Differential

8 - Right flange shaft

9 - Left flange shaft

10 - Synchromeshed gear for 2nd gear

11 - Synchromeshed gear for 1st gear

12 - Synchromeshed gear for 4th gear

13 - Synchromeshed gear for 3rd gear

14 - Synchromeshed gear for 5th gear

15 - Synchromeshed gear for 6th gear

16 - Synchromeshed gear for reverse gear

17 - Gearbox housing

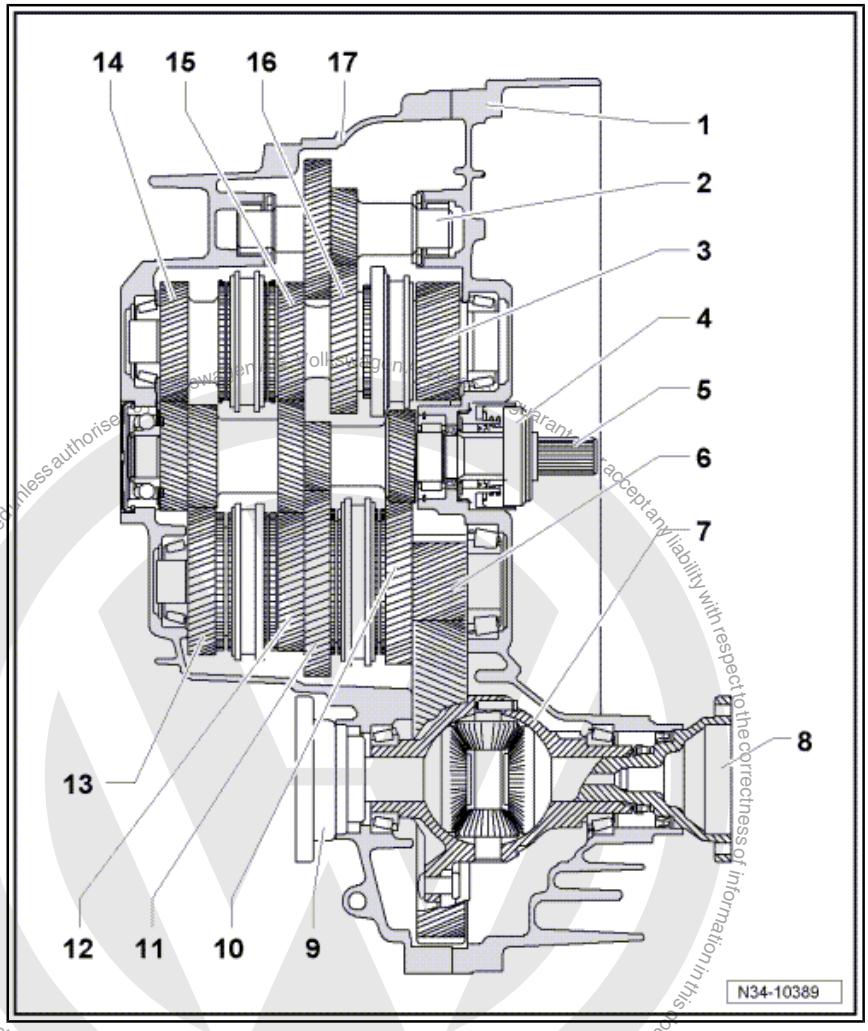

Protected by copyright. Copying for private or commercial purposes, in part or in whole, is not permitted unless authorised. Copyright by Volkswagen AG. We accept any liability with respect to the correctness of information in this document.

Downloaded from www.Manualslib.com manuals search engine

5.2 Assembly overview

I - Removing and installing gearbox housing and selector mechanism ⇒ page 130

II - Removing and installing input shaft, output shafts, differential and selector rods ⇒ page 132

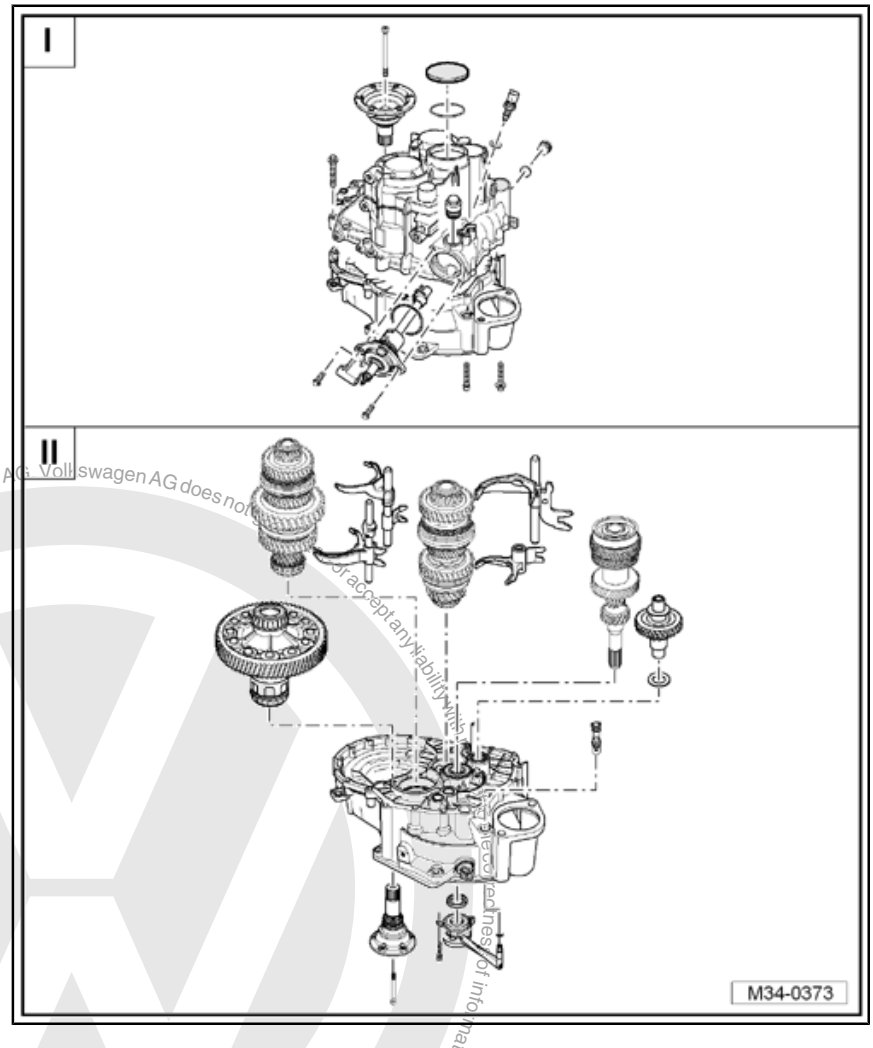

Note

From gearbox date 21 01 8, sealing cover for input shaft is secured with a retaining ring -A-.

Assembly order, gearbox »without« retaining ring -A- for input shaft sealing cover ⇒ page 134

Assembly order, gearbox »with« retaining ring -A- for input shaft sealing cover ⇒ page 145

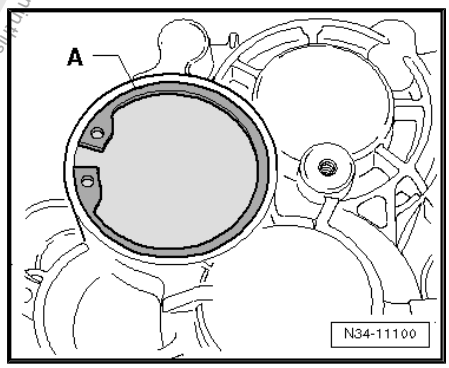

Copyright by Volkswagen AG. Volkswagen AG does not accept any liability with respect to the correctness of information in this document. Copyright by Volkswagen AG. Reproduction for commercial purposes, in part or in whole, is not permitted unless authorised by Volkswagen AG.

Downloaded from www.Manualslib.com manuals search engine

5.3 Removing and installing gearbox housing and selector mechanism

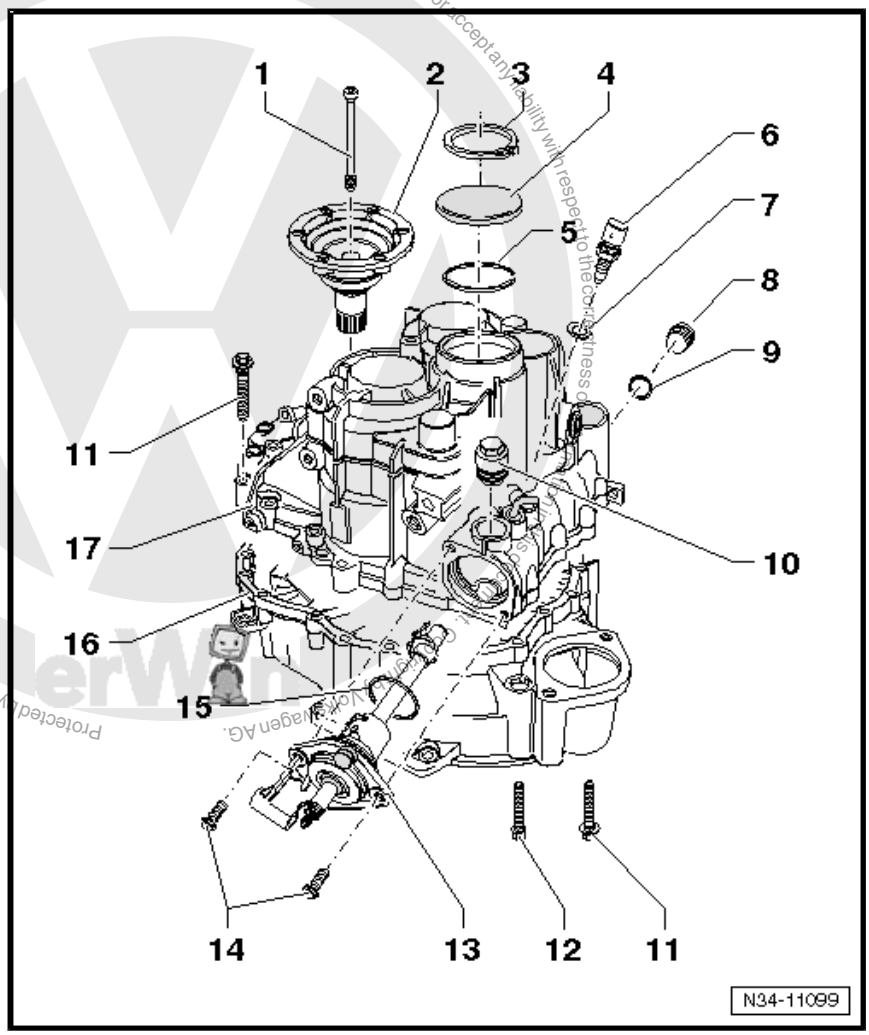

1 - Countersunk bolt, 33 Nm

2 - Flange shaft with compression spring

- ❑ Removing and installing ⇒ page 227
- ❑ Assembling ⇒ page 233

3 - Retaining ring

- ❑ For sealing cover ⇒ Item 4 (page 130)
- ❑ Fitted from gearbox date 21 01 8

4 - Cover plate

- ❑ Secured with retaining ring from gearbox date 21 01 8
- ❑ Allocate components according to ⇒ Electronic parts catalogue „ETKA“ .

5 - Retaining ring

- ❑ For deep groove ball bearing of input shaft ⇒ Item 1 (page 180)

6 - Reversing light switch -F4- , 20 Nm

- ❑ Changed to captive seal shortly after introduction of gearbox ⇒ Item 7 (page 130) .

7 - Seal

- ❑ Not fitted in all gearboxes
- ❑ Always renew

8 - Oil drain plug

- ❑ Torque setting ⇒ page 127

9 - Seal

- ❑ Always renew

10 - Locking bolt, 45 Nm

- ❑ For selector shaft

11 - Bolt, 15 Nm + turn 90° further

- ❑ Bolt with captive washer only as replacement part
- ❑ Always renew; allocate shim according to ⇒ Electronic parts catalogue „ETKA“
- ❑ Allocation of bolts as replacement part ⇒ page 131

12 - Bolt, 15 Nm + turn 90° further

- ❑ Without washer
- ❑ Always renew; allocate shim according to ⇒ Electronic parts catalogue „ETKA“
- ❑ Allocation of bolts as replacement part ⇒ page 131

13 - Selector unit

- ❑ (Selector shaft with selector shaft cover)

Downloaded from www.Manualslib.com manuals search engine

- ❑ Repairing ⇒ page 172 .
- ❑ Removing with gearbox installed:

- ♦ Remove battery and battery tray ⇒ Electrical system; Rep. gr. 27 ; Battery; Removing and installing battery .
- ♦ The angled rod ⇒ Item 6 (page 160) for adjusting the selector mechanism must not be engaged.
- ♦ Remove selector cables and gearbox selector lever ⇒ page 71
- ♦ Remove locking screw ⇒ Item 10 (page 130) and pull out selector mechanism

14 - Bolt, 20 Nm

- ❑ Always renew

15 - O-ring

- ❑ Always renew

16 - Clutch housing

- ❑ Repairing ⇒ page 167 .

17 - Gearbox housing

- ❑ Repairing ⇒ page 157 .

Allocation of bolts as replacement parts

A - Bolt with captive washer

B - Bolt without washer

C - Bolt with captive washer

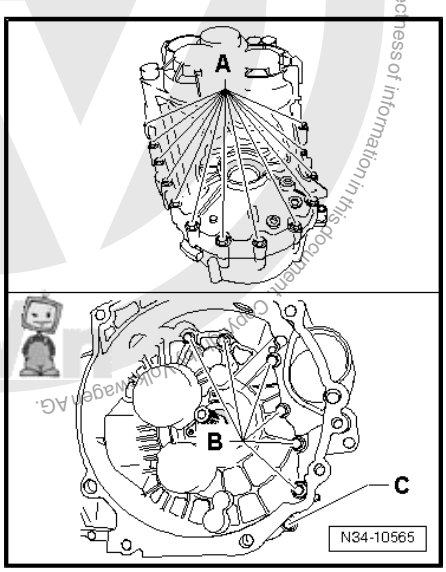

Protected by copyright. Copying for private or commercial purposes, in part or in whole, is not permitted unless authorised by Volkswagen AG. Volkswagen AG does not guarantee or accept any liability with respect to the correctness of information in this document. Copyright by Volkswagen AG.

Downloaded from www.Manualslib.com manuals search engine

5.4 Removing and installing input shaft, output shafts, differential and selector rods

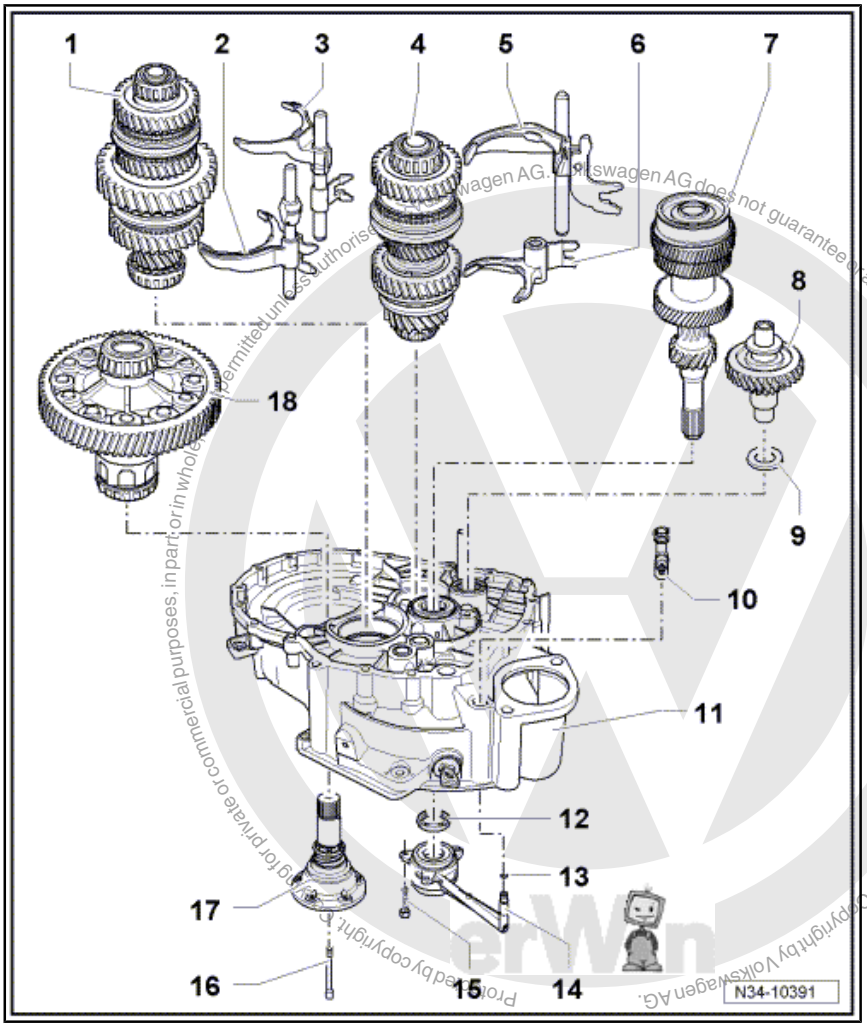

1 - Output shaft for 1st through 4th gears

- ❑ Dismantling and assembling ⇒ page 187
- ❑ Installation position ⇒ page 133

2 - Selector rod with selector fork for 1st and 2nd gears

- ❑ Installation position ⇒ page 133

3 - Selector rod with selector fork for 3rd and 4th gears

- ❑ Installation position ⇒ page 133

4 - Output shaft for 5th, 6th and reverse gears

- ❑ Dismantling and assembling ⇒ page 211
- ❑ Installation position ⇒ page 133

5 - Selector rod with selector fork for 5th and 6th gears

- ❑ Installation position ⇒ page 133

6 - Selector fork for reverse gear

- ❑ Installation position ⇒ page 133
- ❑ Distinguishing ⇒ page 176
- ❑ Repairing ⇒ page 175 .

7 - Input shaft

- ❑ Dismantling and assembling ⇒ page 178
- ❑ Always renew deep groove ball bearing on input shaft ⇒ Item 6 (page 180) .

8 - Reverse shaft

- ❑ With thrust washer

9 - Thrust washer

10 - Breather

- ❑ Connect to slave cylinder ⇒ Item 14 (page 132)

11 - Clutch housing

- ❑ Repairing ⇒ page 167 .

12 - Input shaft seal

- ❑ Renewing ⇒ page 167

13 - O-ring

- ❑ Pull onto line connection
- ❑ Moisten with brake fluid before installing

Protected by copyright. Copyright by Volkswagen AG. Volkswagen AG does not guarantee or accept any liability with respect to the correctness of information in this document. Copying for private or commercial purposes, in part or in whole, is not permitted unless authorised by Volkswagen AG.

Downloaded from www.Manualslib.com manuals search engine

14 - Slave cylinder with clutch release bearing

15 - Bolt

- ❑ Qty. 3
- ❑ Always renew
- ❑ Without locking fluid 12 Nm (only slave cylinders with metal housing)
- ❑ With locking fluid 15 Nm (for plastic slave cylinders)
- ❑ Carefully tighten diagonally in small steps so that the bolting eyes of the slave cylinder do not break off

16 - Countersunk bolt, 33 Nm

17 - Flange shaft with compression spring

- ❑ Removing and installing ⇒ page 227
- ❑ Assembling ⇒ page 233

18 - Differential

- ❑ Dismantling and assembling ⇒ page 233

Installation position of shafts and selector rods in gearbox

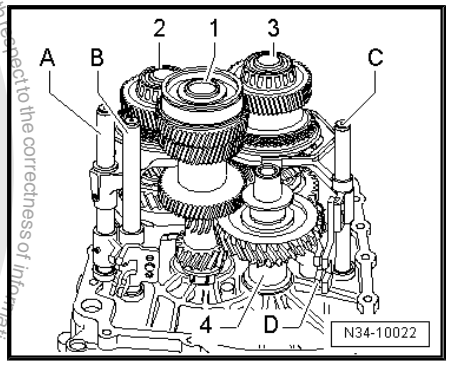

1 - Input shaft

2 - Output shaft for 1st through 4th gears

3 - Output shaft for 5th, 6th and reverse gear

4 - Reverse shaft

A - Selector rod for 3rd and 4th gears

B - Selector rod for 1st and 2nd gears

C - Selector rod for 5th and 6th gears

D - Selector fork for reverse gear [1)]

[1)] In some gearboxes, mounting of reverse gear selector fork on selector rod for selector fork for 5th and 6th gears - C - . Distinguishing between reverse gear selector forks ⇒ page 176 .

Protected by copyright. Copyright by Volkswagen AG. Volkswagen AG does not guarantee or accept any liability with respect to the correctness of information in this document. Copyright by Volkswagen AG. Reproduction, in whole or in part, for commercial purposes, is not permitted without the express authorization of Volkswagen AG.

Downloaded from www.Manualslib.com manuals search engine

5.5 Assembly order, gearbox »without« retaining ring -A- for input shaft sealing cover

Removing and installing gearbox housing, selector mechanism, input shaft, output shafts, differential and selector rods.

Special tools and workshop equipment required

- Support plate -VW 309-
- Support clamp -VW 313-
- Gearbox support -VW 353-
- Sleeve -VW 455- or sleeve -3160-
- Multipurpose tool -VW 771-
- -1- Internal puller -Kukko 21/01-
- -3- Splitter -Kukko 17/0-
- -4- Counter support -Kukko 22/1-

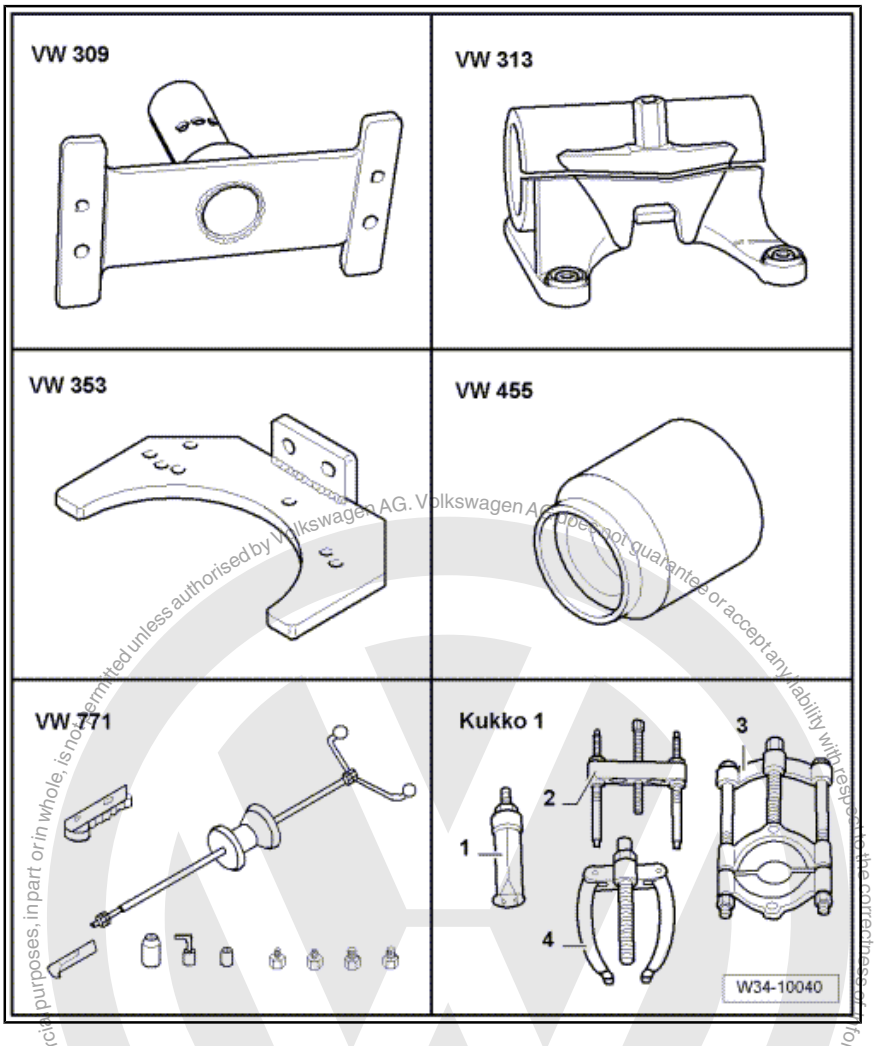

Protected by copyright. Copying for private or commercial purposes, in part or in whole, is not permitted unless authorised by Volkswagen AG. Volkswagen AG does not guarantee or accept any liability with respect to the correctness of information in this document. Copyright by Volkswagen AG.

Downloaded from www.Manualslib.com manuals search engine

- Support bridge -30 - 211 A-
- Thrust piece -T10042-
- Drift -T10169-
- or drift -T10362-
  ⇒ page 163
- Thrust piece -T40008-
- Torque wrench -V.A.G 1331-
- Hot air blower -V.A.G 1416-

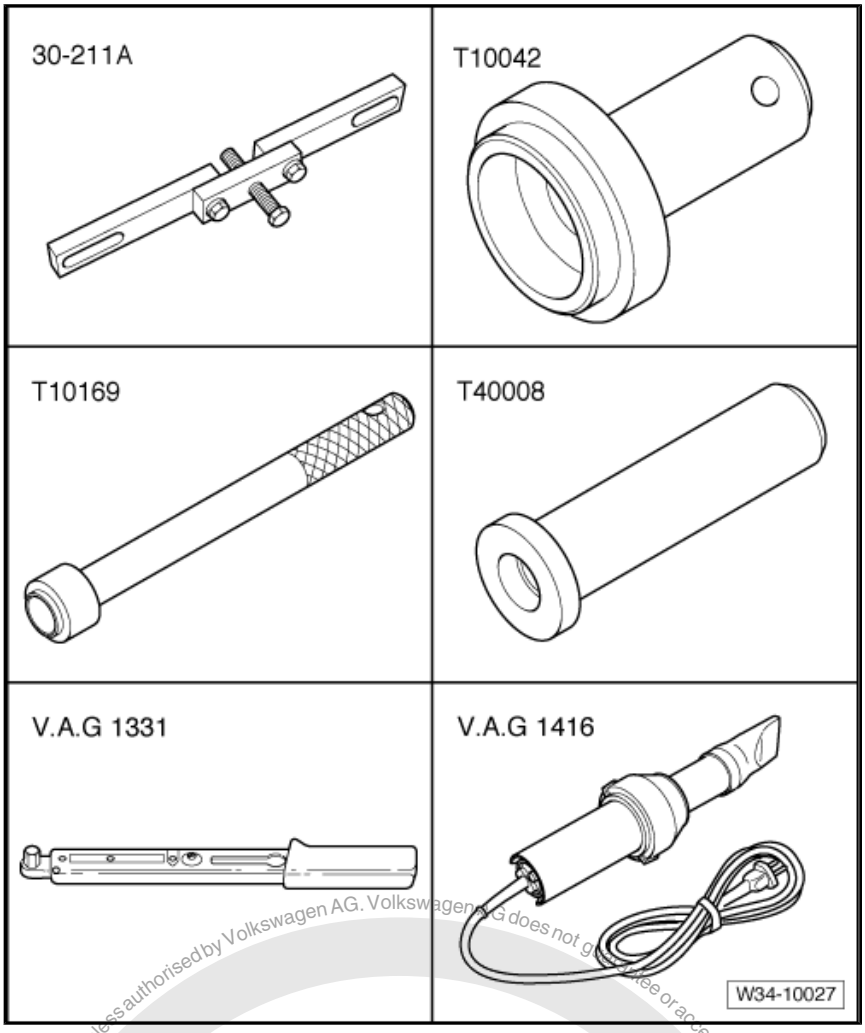

- Drip tray for workshop hoist -VAS 6208-

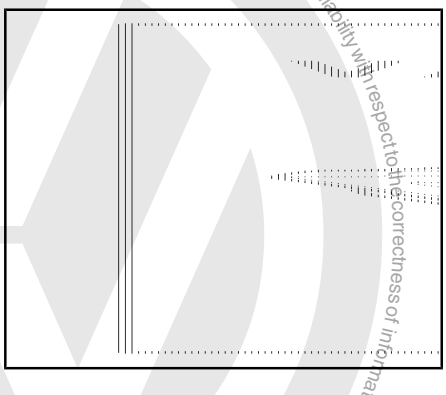

Protected by copyright. Copying for private or commercial purposes, in part or in whole, is not permitted unless authorised by Volkswagen AG. Volkswagen AG does not guarantee or accept any liability with respect to the correctness of information in this document. Copyright by Volkswagen AG.

Downloaded from www.Manualslib.com manuals search engine

5.5.1 Removing

– Secure gearbox to assembly stand using bolts -arrows-.

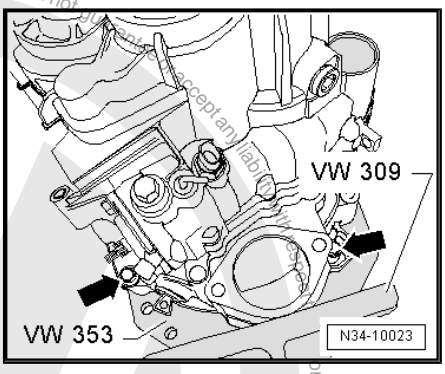

Note

If one of the bolting holes does not contact the gearbox support , lay a washer between the hole and the gearbox support .

– Rotate gearbox on assembly stand so that oil drain plug is below.

– Place drip tray underneath.

– Drain gear oil.

– Remove slave cylinder with clutch release bearing -arrows-.

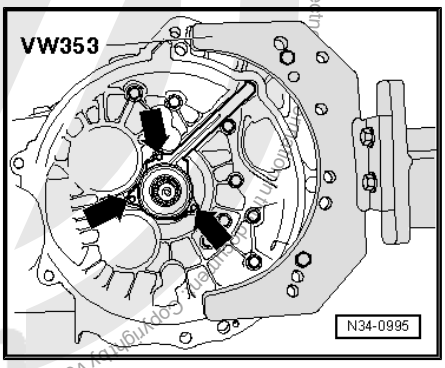

During the following steps, ensure that the selector shaft is not blocked by the angled rod -arrow-.

– Move selector shaft to neutral.

– Remove reversing light switch -F4- -1-.

– Remove locking bolt -2-.

– Then remove bolts -3-.

– Pull selector shaft with selector shaft cover -4- out of gearbox housing.

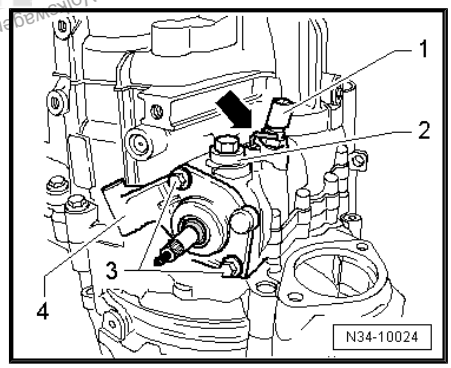

– Remove securing bolt for left and right flange shaft by screwing two bolts into flange and counterholding using a lever.

– Pull out flange shafts with compression spring.

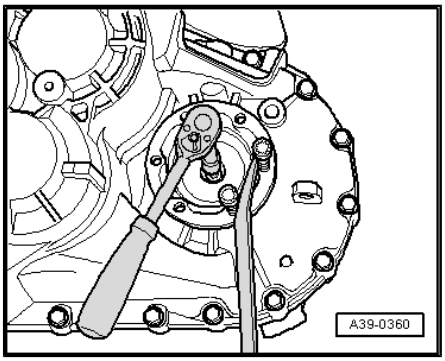

Downloaded from www.Manualslib.com manuals search engine

– Remove bolts -B-, which secure gearbox housing to clutch housing.

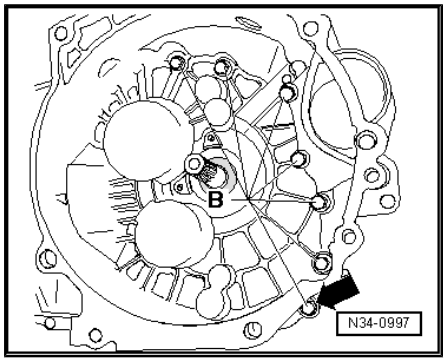

Note

One bolt -arrow- is located outside of bolting flange.

– Lock input shaft as follows:

The lengths of the splines on the input shaft differ to those of the gearbox.

– Set either installing sleeve -VW 455- over input shaft on clutch housing

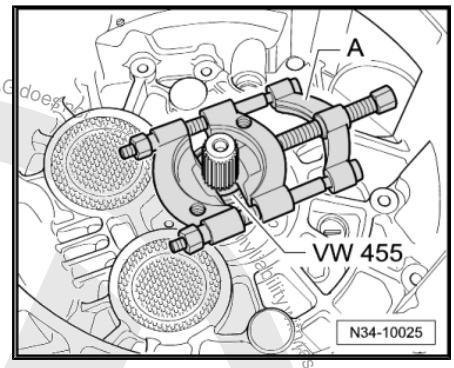

– or set sleeve -3160- over input shaft on clutch housing

– Clamp splitter -A-, e.g. -Kukko 17/0- , behind notch in splines of input shaft.

The back side of the splitter must rest against installing sleeve -VW 455- or sleeve -3160- without play.

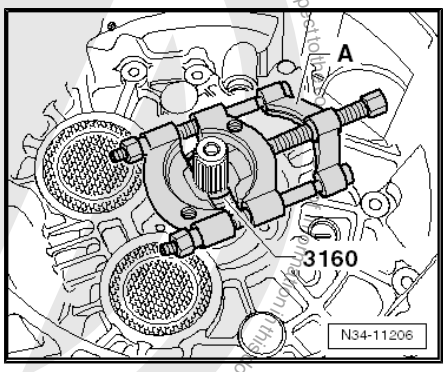

– Pierce rubber in centre of cover -C- with a screwdriver.

– Pull cover plate out of gearbox housing.

A - Counter support , e.g. -Kukko 22/1-

B - Internal puller, 8 … 12 mm , e.g. -Kukko 21/01-

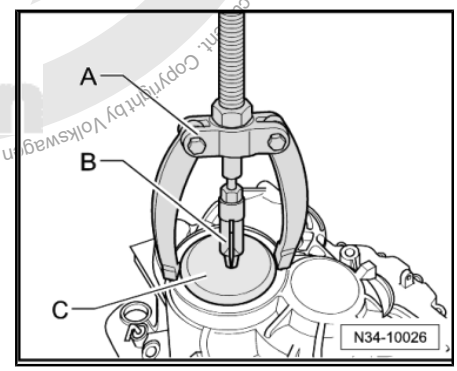

Protected by copyright. Copying for private or commercial purposes, in part or in whole, is not permitted unless authorised by Volkswagen AG. Volkswagen AG does not guarantee or accept any liability with respect to the accuracy, completeness or timeliness of the information in this document. Copyright by Volkswagen AG.

Downloaded from www.Manualslib.com manuals search engine

Remove retaining ring -C- from deep groove ball bearing of input shaft in gearbox housing as follows:

– Hold one end of retaining ring with screwdriver -A-.

– Using a screwdriver , -B-, lever other end out of groove in deep groove ball bearing -direction of arrow-.

– Using screwdriver -B-, lever out securing ring further.

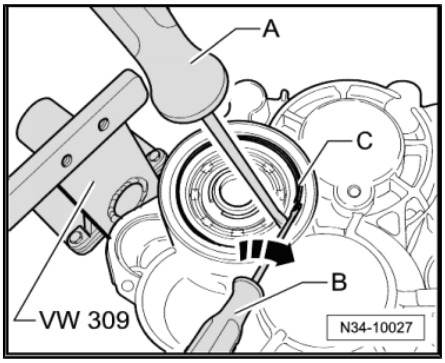

– If present, remove washer -1- from gearbox housing -2-.

• If gearbox housing is to be renewed, check whether washer must be installed ⇒ page 141 .

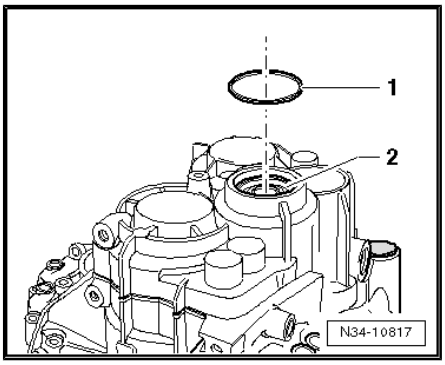

– Remove securing bolts -A- for gearbox housing to clutch housing.

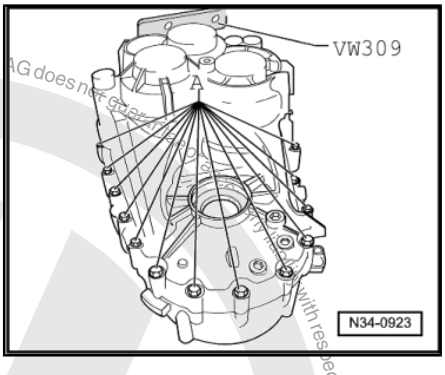

– Screw adapter -VW 771/40- into threaded hole of gearbox housing.

– Heat gearbox housing using hot air blower , e.g. -V.A.G 1416- in vicinity of bearing seat for deep groove ball bearing for input shaft for about 10 minutes to about 100 °C.

– Using multi-purpose tool -VW 771/1- , pull gearbox housing off clutch housing in -direction of arrow-.

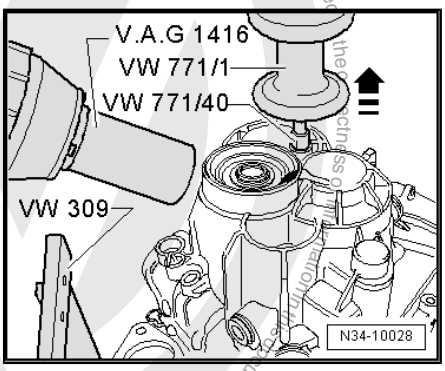

Note

If necessary, carefully apply lever on alternating sides at overhanging housing shoulders along perimeter, being careful not to damage sealing surfaces.

Protected by copyright. Copying for private or commercial purposes, in part or in whole, is not permitted unless authorised by Volkswagen AG. Volkswagen AG does not guarantee or accept any liability with respect to the correctness of information in this document. Copyright by Volkswagen AG.

Downloaded from www.Manualslib.com manuals search engine

– If present, remove washer -1- from deep groove ball bearing -2-.

– If gearbox housing is to be renewed, check whether washer must be re-installed ⇒ page 141 .

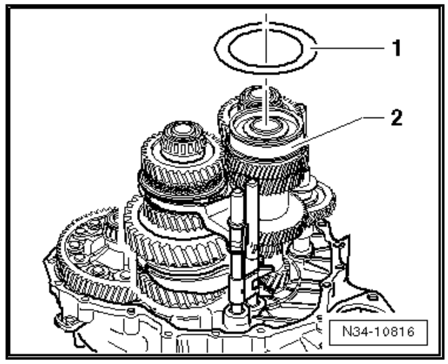

– Remove splitter -A- and installing sleeve VW 455 (fig.) or sleeve -3160- from input shaft.

To remove shafts from clutch housing, a second mechanic is required.

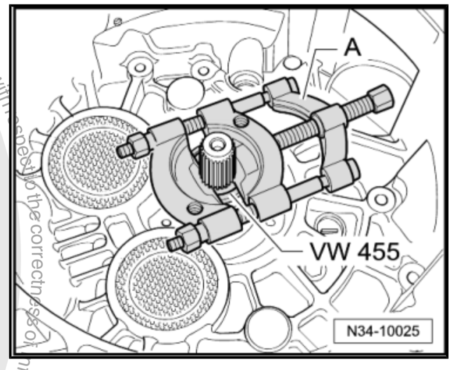

– With left hand, raise differential -1-. With right hand, lift output shaft for 1st to 4th gear together with selector rods -2- -arrow A-.

– At same time, second mechanic lifts input shaft, reverse shaft and output shaft for reverse, 5th and 6th gears -3- together with selector rods out of clutch housing -arrow B-.

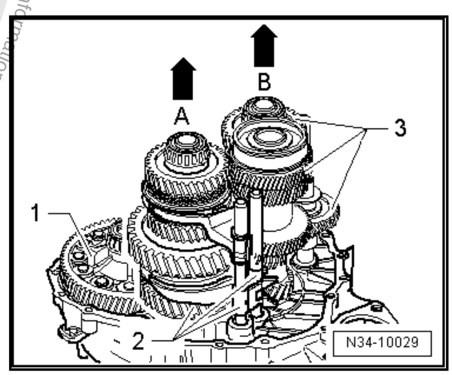

Note

After shafts are lifted, differential may be set back in clutch housing if desired.

– Remove input shaft oil seal.

Note

Always renew deep groove ball bearing on input shaft *⇒ Item 6 (page 180)* *.*

5.5.2 Installing

• A new deep groove ball bearing has been pressed onto the input shaft ⇒ Item 6 (page 180) .

Protected by copyright. Copying for private or commercial purposes, in part or in whole, is not permitted unless authorised by Volkswagen AG. Volkswagen AG does not guarantee or accept any liability with respect to the correctness of information in this document. Copyright by Volkswagen AG.

Downloaded from www.Manualslib.com manuals search engine

Protected by copyright. Copyright by Volkswagen AG. Volkswagen AG does not guarantee or accept any liability with respect to the correctness of information in this document. Copying for private or commercial purposes, in part or in whole, is not permitted unless authorized by Volkswagen AG.

– Insert input shaft -1-, output shaft for 5th and 6th gears -2- together with selector rod -3-, selector fork -4- and reverse shaft -5-.

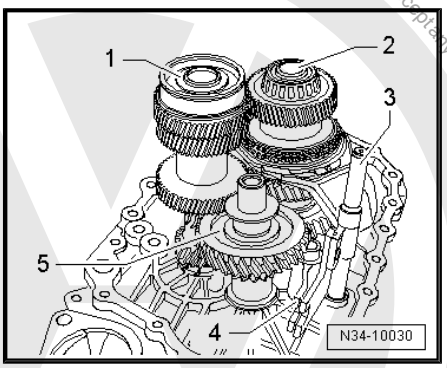

– Then insert differential -1-.

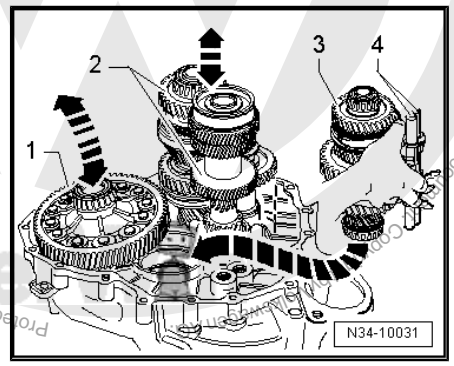

Note

A second mechanic will be required for further installation of shafts in clutch housing.

– Take output shaft for 1st through 4th gears -3- with selector rods -4- in the right hand as shown in figure.

– With the left hand, lift differential -1- slightly.

– At the same time, a 2nd mechanic must slightly lift input shaft and output shaft for 5th and 6th gears and reverse gear -2- together with reverse gear shaft.

– Now insert output shaft for 1st through 4th gears in -direction of arrow-.

• The teeth of the input shaft, the output shafts and the final drive input gear of differential must mesh.

– Now, together with a second mechanic, place shafts and differential in their bearing seats.

– Secure support bridge -30 - 211 A- for input shaft to clutch housing.

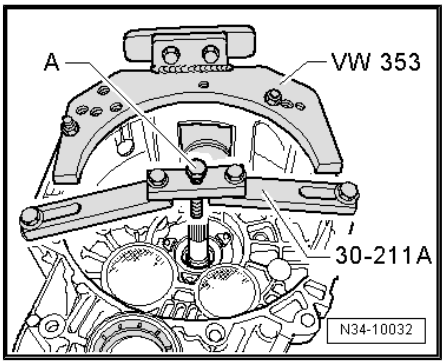

Note

For clarity of illustration, clutch housing is shown turned 180°.

– Screw in bolt -A- until input shaft rises slightly.

Downloaded from www.Manualslib.com manuals search engine

On some gearboxes, flats -A- are present on the deep groove ball bearing for the input shaft and the bearing support -B-.

Check deep groove ball bearing for input shaft and gearbox housing.

Deep groove ball bearing for input shaft and gearbox housing
No flats on deep groove ball bearing -A- or on bearing support -B- ⇒ page 141
Flats on deep groove ball bearing -A- and on bearing support -B- ⇒ page 142

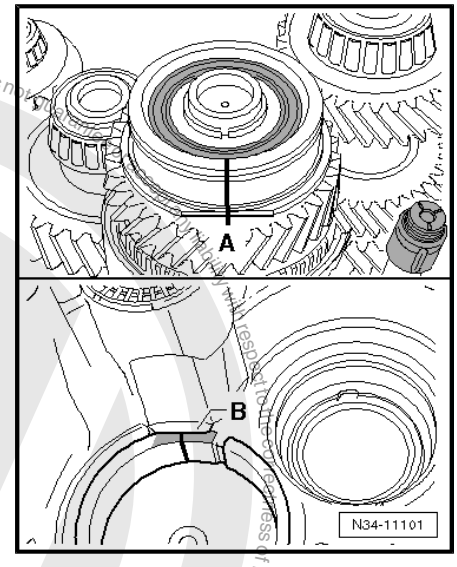

From gearbox date 10 04 6 through around gearbox date 20 01 8:

A washer is installed above and one below the deep groove ball bearing for the input shaft ⇒ Item 6 (page 180) **.**

Upper washer	Outer diameter	78.6 mm
Lower washer	Outer diameter	85 mm

Measure distance above seat for deep groove ball bearing.

Distance above deep groove ball bearing	Dimension „a“	Upper washer
Through gearbox date 09 04 6	10 mm	no
From gearbox date 10 04 6	10.7 mm	yes

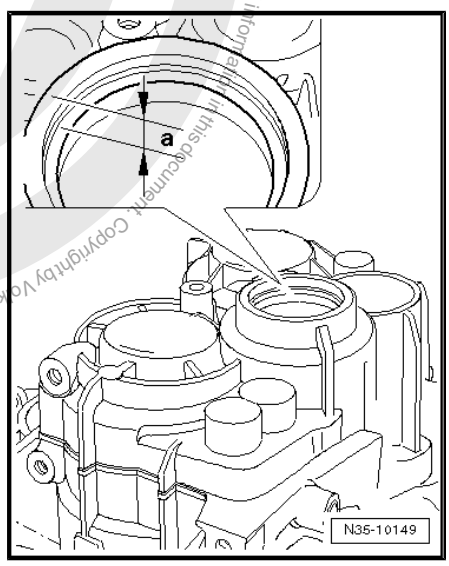

In the gearbox housing, the area below the seat for the deep groove ball bearing is also modified -arrow-

Area below bearing seat		Lower washer
Through gearbox date 09 04 6	Not further machined	no
From gearbox date 10 04 6	Machined slightly deeper	yes

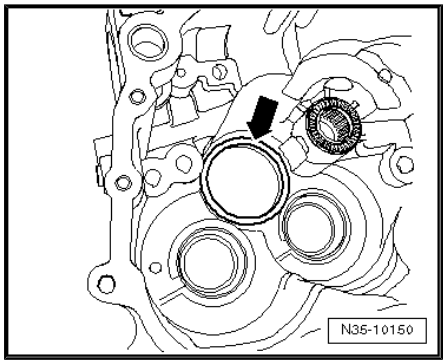

Protected by copyright. Copying for private or commercial purposes, in part or in whole, is not permitted unless authorised by Volkswagen AG. Volkswagen AG does not guarantee or accept any liability with respect to the correctness of information in this document. Copyright by Volkswagen AG.

Downloaded from www.Manualslib.com manuals search engine

– If necessary, lay a washer (outer diameter = 85 mm) -1- on deep groove ball bearing -2-.

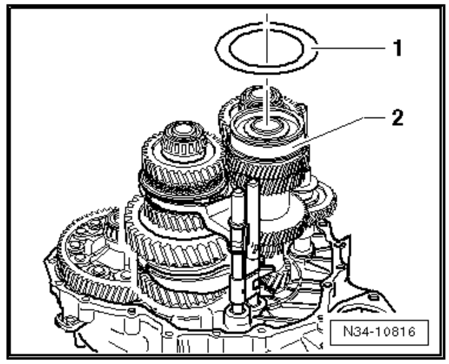

For some gearboxes:

Flats -A- on deep groove ball bearing for input shaft and on bearing support -B-

- No washers may be laid above or below the deep groove ball bearing.
- Flats -A- on deep groove ball bearing and on bearing support -B- in gearbox housing must line up.

– Mark flats with coloured marks.

– Transfer markings to upper area of deep groove ball bearing and to upper area of bearing support of gearbox housing (⇒ next figure).

– Heat gearbox housing for about 10 minutes to 100° C in vicinity of seat for deep groove ball bearing of input shaft using -hot air blower- , e.g. -V.A.G 1416- .

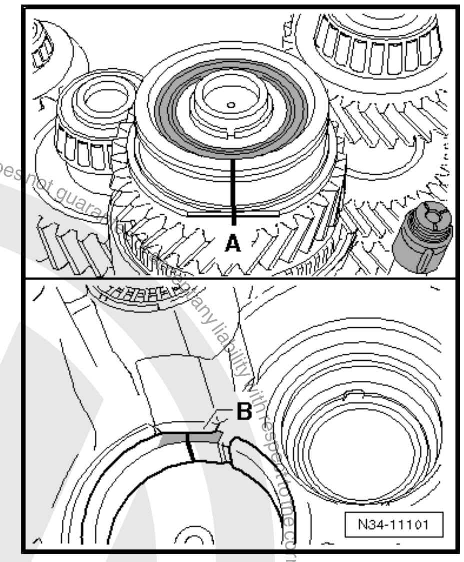

Note

- *Heating is necessary to avoid damage to deep groove ball bearing when gearbox housing is installed.*
- *Line up marking on deep groove ball bearing -A- with marking on gearbox housing -B- and set gearbox housing in place.*

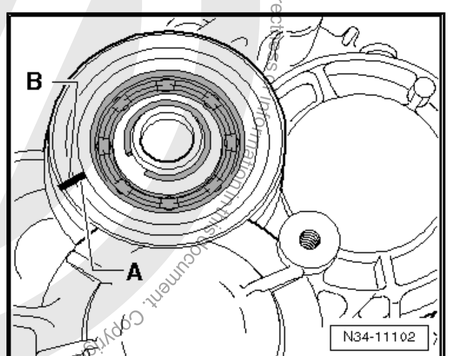

– For all gearboxes, heat gearbox housing for about 10 minutes to 100° C in vicinity of seat for deep groove ball bearing of input shaft using -hot air blower- , e.g. -V.A.G 1416- .

– Apply sealant -AMV 188 200 03- evenly to sealing surface of clutch housing.

Protected by copyright. Copying for private or commercial purposes, in part or in whole, is not permitted unless authorised by Volkswagen AG. Volkswagen AG does not guarantee or accept any liability with respect to the correctness of information in this document. Copyright by Volkswagen AG.

Downloaded from www.Manualslib.com manuals search engine

– Set gearbox housing in place and tighten new bolts -A-, -B- and -C- to specified torque.

Allocation of bolts:

A - Bolt with captive washer

B - Bolt without washer

C - Bolt with captive washer

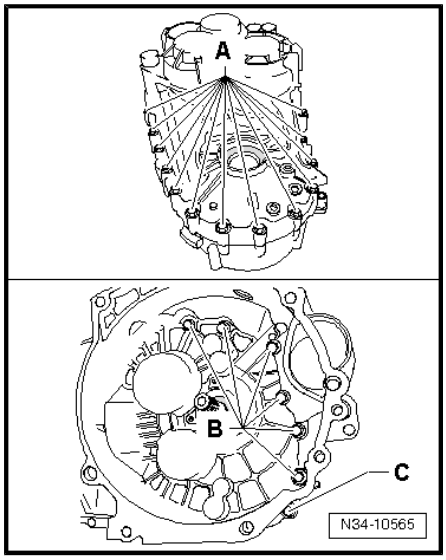

– If a washer was laid on the deep groove ball bearing before the gearbox housing was set in place, a washer -1- (outer diameter = 78.6 mm) must also be placed above the deep groove ball bearing -2- ⇒ page 141 .

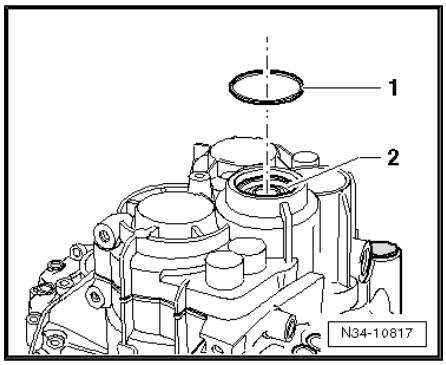

– Install retaining ring -1- for deep groove ball bearing of input shaft.

– Remove support bridge -30 - 211 A- for input shaft.

– If stop sleeve for selector shaft has been removed, now drive it in to stop of tool ⇒ page 163 .

– Turn gearbox in repair stand with opening for selector shaft upwards.

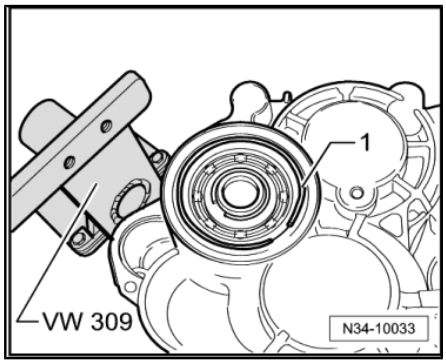

– Insert selector shaft -1- in lower bearing -2- and in selector forks -3-.

Note

For better clarity, sealing cover is removed in illustration.

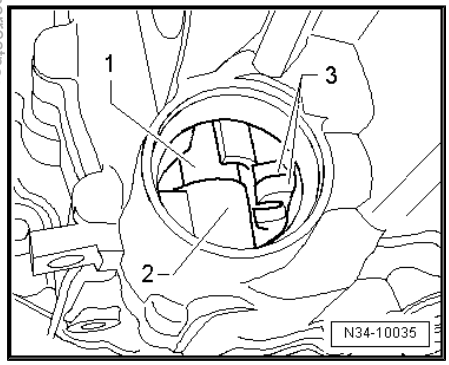

Protected by copyright. Copying for private or commercial purposes, in part or in whole, is not permitted unless authorised by Volkswagen AG. Volkswagen AG does not guarantee or accept any liability with respect to the correctness of information in this document. Copyright by Volkswagen AG.

Downloaded from www.Manualslib.com manuals search engine

– Now press selector shaft -1- against stop sleeve -2- in -direction of arrow- and guide downwards with selector finger -3- through selector forks to stop.

• Selector shaft cover -4- must be parallel to bolting surface on gearbox housing.

• Selector shaft must move freely in gate selection direction (upwards and downwards).

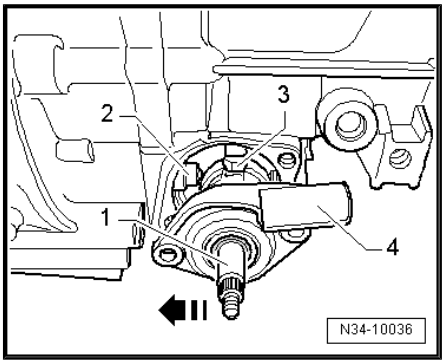

Note

If selector shaft cover is tilted relative to bolting surface, selector shaft is not inserted in lower bearing.

– Tighten bolts -3- for selector shaft cover -4-.

– Screw in locking bolt -2-, ensuring that angled rod -arrow- is not engaged.

– Install reversing light switch -F4- -1-.

– Install left and right flange shaft with springs, thrust washers and tapered rings.

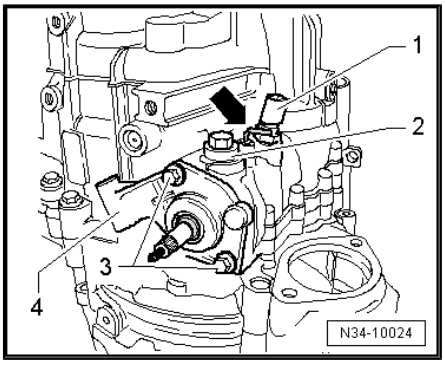

– Drive in input shaft oil seal.

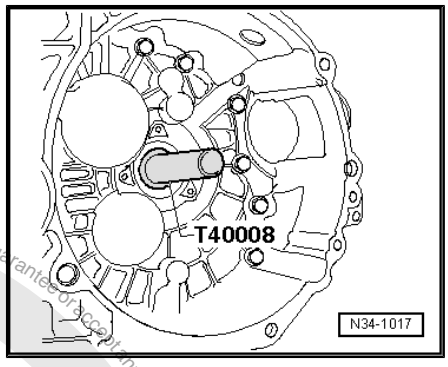

– Install slave cylinder with release bearing and tighten bolts -arrows- to specified torque ⇒ Item 4 (page 39) .

– Shift through all gears.

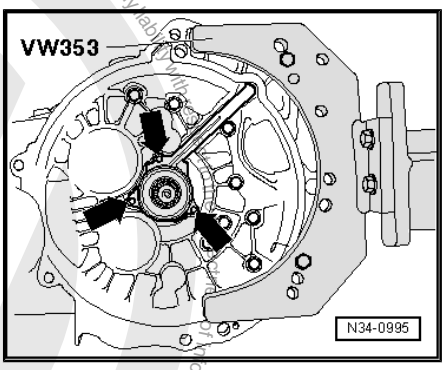

Protected by copyright. Copying for private or commercial purposes, in part or in whole, is not permitted unless authorised by Volkswagen AG. Volkswagen AG does not guarantee or accept any liability with respect to the correctness of information in this document. Copyright by Volkswagen AG.

Downloaded from www.Manualslib.com manuals search engine

– Drive sealing cover into gearbox housing to stop using thrust piece -T10042- .

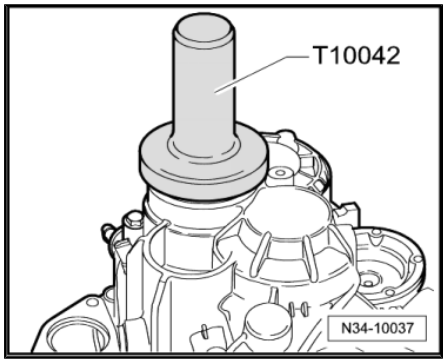

5.6 Assembly order, gearbox »with« retaining ring -A- for input shaft sealing cover

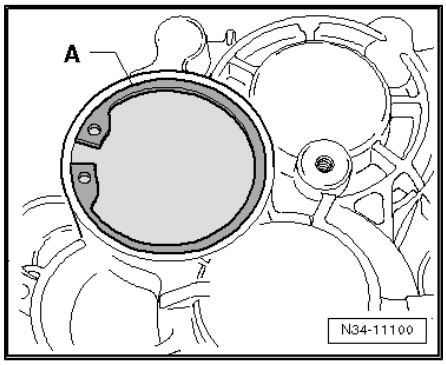

Removing and installing gearbox housing, selector mechanism, input shaft, output shafts, differential and selector rods.

Protected by copyright. Copying for private or commercial purposes, in part or in whole, is not permitted unless authorised by Volkswagen AG. Volkswagen AG does not guarantee or accept any liability with respect to the correctness of information in this document. Copyright by Volkswagen AG.

Downloaded from www.Manualslib.com manuals search engine

Special tools and workshop equipment required

- Support plate -VW 309-
- Support clamp -VW 313-
- Gearbox support -VW 353-
- Sleeve -VW 455- or sleeve -3160-
- Multipurpose tool -VW 771-
- -1- Internal puller -Kukko 21/01-
- -3- Splitter -Kukko 17/0-
- -4- Counter support -Kukko 22/1-

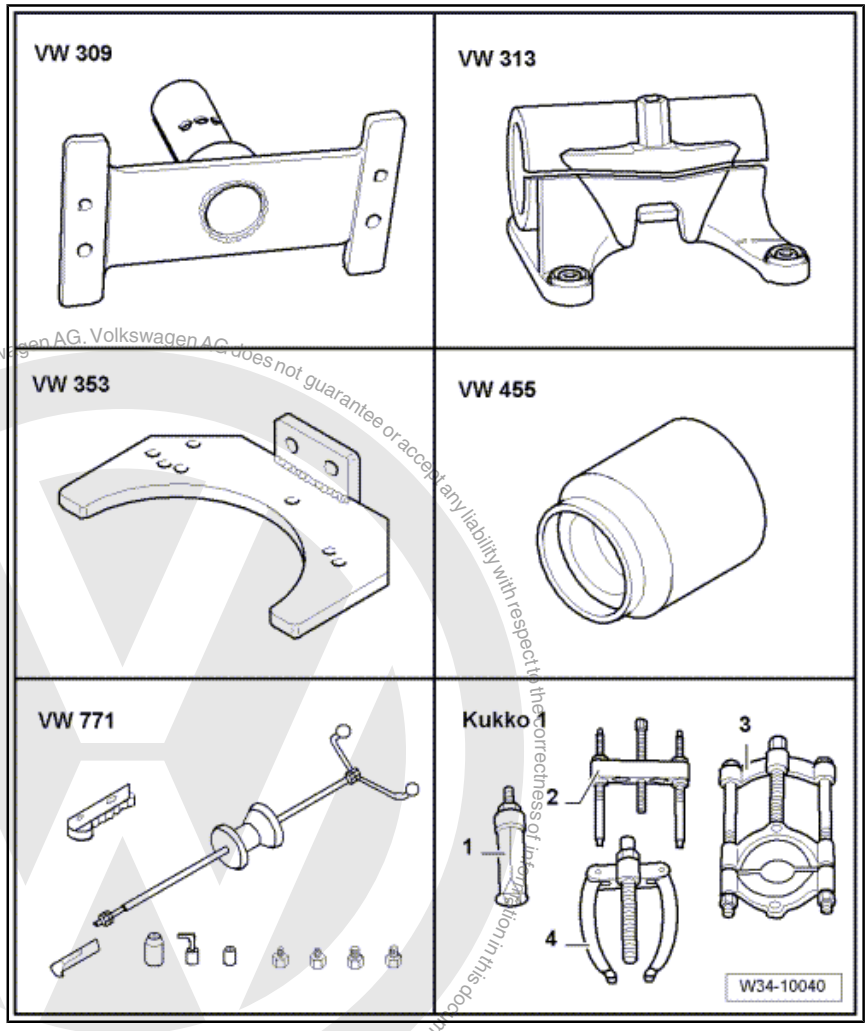

Protected by copyright. Copying for private or commercial purposes, in part or in whole, is not permitted unless authorised by Volkswagen AG. Volkswagen AG does not guarantee or accept any liability with respect to the correctness of information in this document. Copyright by Volkswagen AG.

Downloaded from www.Manualslib.com manuals search engine

- Support bridge -30-211A-
- Thrust piece -T10143-
- Drift -T10169-
- or drift -T10362-
  ⇒ page 163
- Thrust piece -T40008-
- Torque wrench -V.A.G 1331-
- Hot air blower -V.A.G 1416-

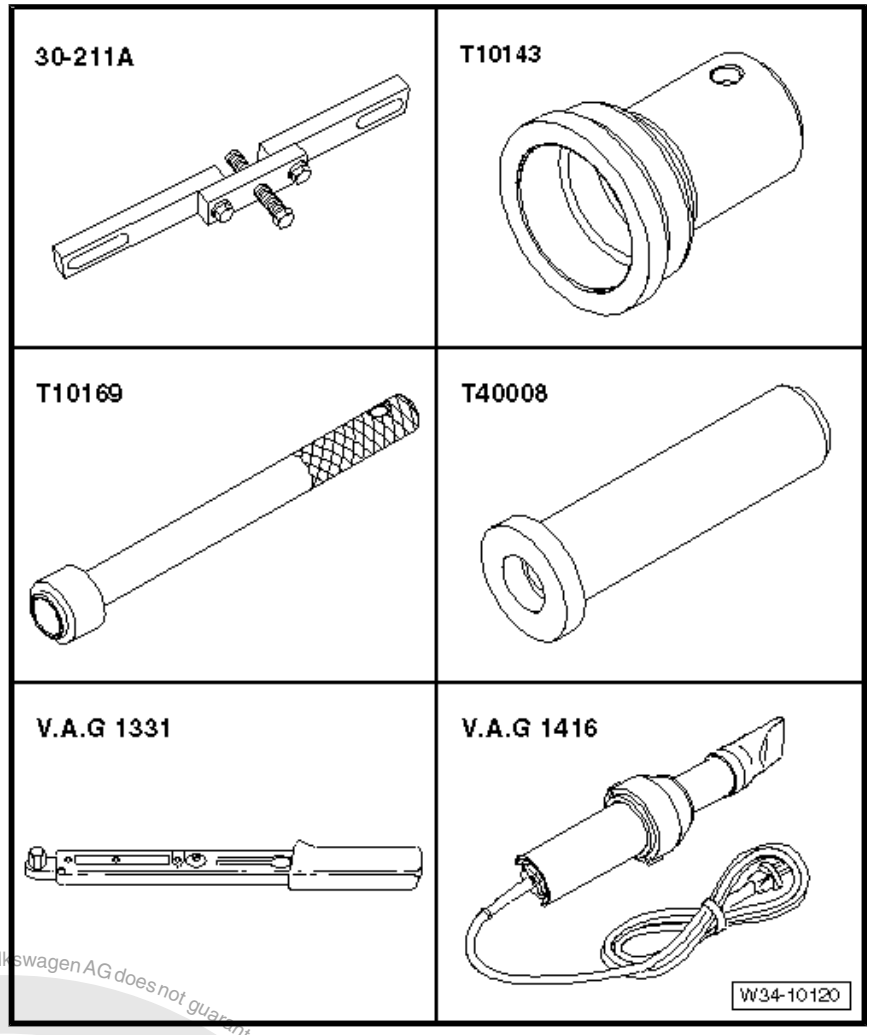

- Drip tray for workshop hoist -VAS 6208-

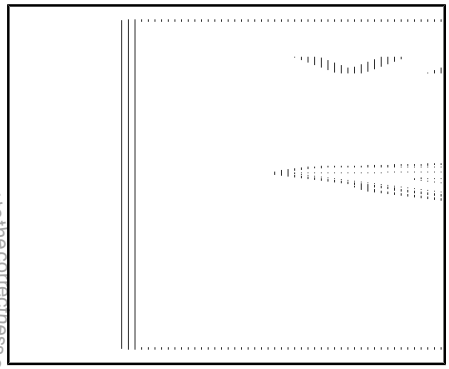

5.6.1 Removing

– Secure gearbox to assembly stand using bolts -arrows-.

Protected by copyright. Copying for private or commercial purposes, in part or in whole, is not permitted unless authorised by Volkswagen AG. Volkswagen AG does not guarantee or accept any liability with respect to the correctness of information in this document. Copyright by Volkswagen AG.

Downloaded from www.Manualslib.com manuals search engine

Note

If one of the bolting holes does not contact the gearbox support , lay a washer between the hole and the gearbox support .

– Rotate gearbox on assembly stand so that oil drain plug is below.
– Place drip tray underneath.
– Drain gear oil.

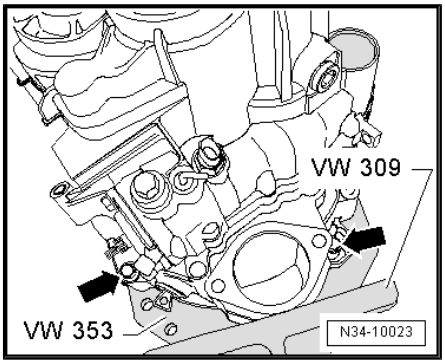

– Remove slave cylinder with clutch release bearing -arrows-.

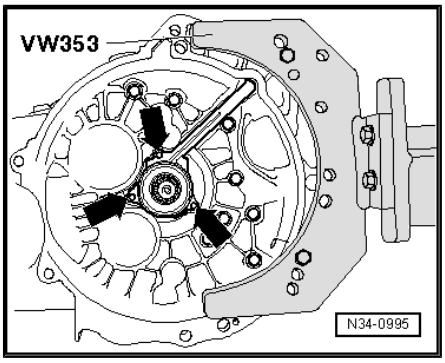

During the following steps, ensure that the selector shaft is not blocked by the angled rod -arrow-.

– Move selector shaft to neutral.
– Remove reversing light switch -F4- -1-.
– Remove locking bolt -2-.
– Then remove bolts -3-.
– Pull selector shaft with selector shaft cover -4- out of gearbox housing.

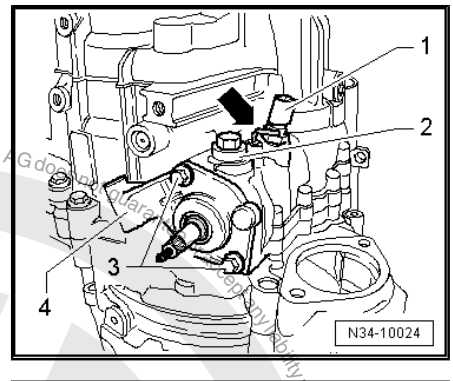

– Remove securing bolt for left and right flange shaft by screwing two bolts into flange and counterholding using a lever.
– Pull out flange shafts with compression spring.

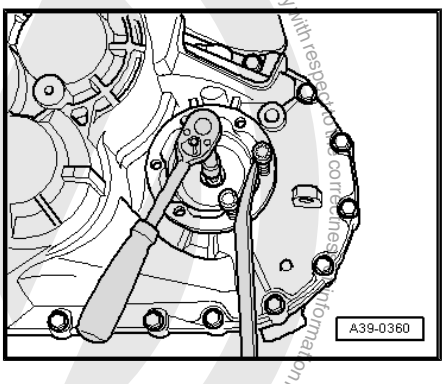

Protected by copyright. Copying for private or commercial purposes, in part or in whole, is not permitted unless authorised by Volkswagen AG. Volkswagen AG does not guarantee or accept any liability with respect to the correctness of information in this document. Copyright by Volkswagen AG.

Downloaded from www.Manualslib.com manuals search engine

– Gearboxes for vehicles with start-stop system: remove gearbox neutral position sender -G701- -arrow-.

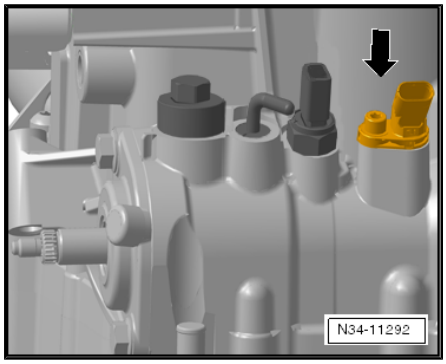

– Remove bolts -B-, which secure gearbox housing to clutch housing.

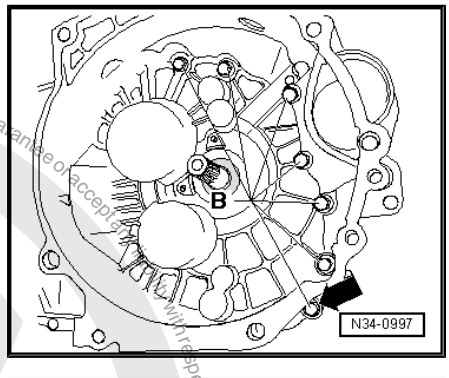

Note

One bolt -arrow- is located outside of bolting flange.

– Lock input shaft as follows:

The lengths of the splines on the input shaft differ to those of the gearbox.

– Set either installing sleeve -VW 455- over input shaft on clutch housing

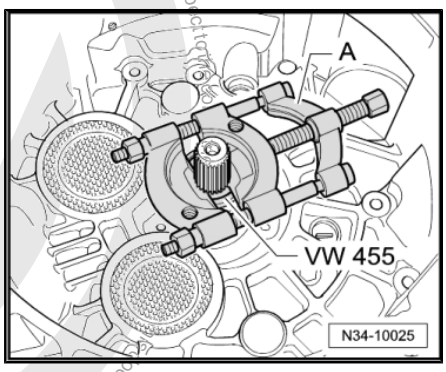

– or set sleeve -3160- over input shaft on clutch housing

– Clamp splitter -A-, e.g. -Kukko 17/0- , behind notch in splines of input shaft.

The back side of the splitter must rest against installing sleeve -VW 455- or sleeve -3160- without play.

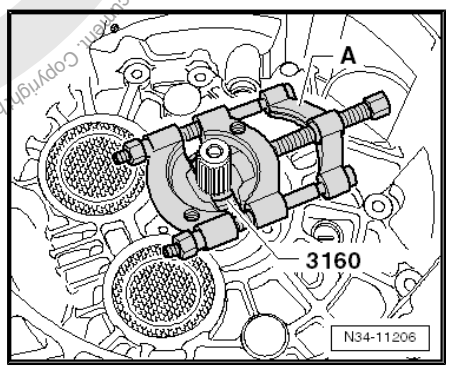

Protected by copyright. Copyright by Volkswagen AG. Volkswagen AG does not guarantee or accept any liability with respect to the current correctness of all contents. Copyright by Volkswagen AG. Copying for private or commercial purposes, in part or in whole, is not permitted unless authorised by Volkswagen AG.

Downloaded from www.Manualslib.com manuals search engine

– Remove retaining ring -A- for input shaft sealing cover.

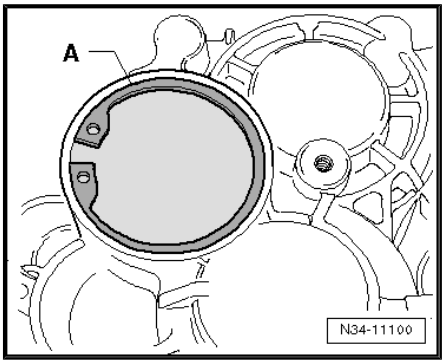

– Pierce rubber in centre of cover -C- with a screwdriver .

– Pull sealing cover out of gearbox housing.

A - Counter support , e.g. -Kukko 22/1-

B - Internal puller, 8 … 12 mm , e.g. -Kukko 21/01-

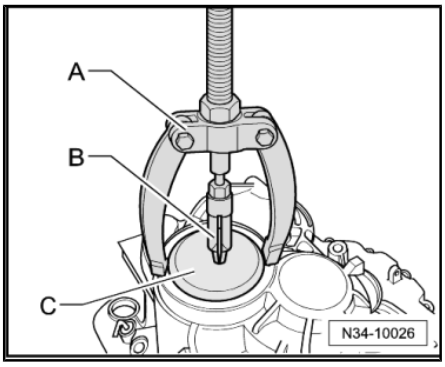

Remove retaining ring -C- from deep groove ball bearing of input shaft in gearbox housing as follows:

– Hold one end of retaining ring with screwdriver -A-.

– Using a screwdriver , -B-, lever other end out of groove in deep groove ball bearing -direction of arrow-.

– Using screwdriver -B-, lever out securing ring further.

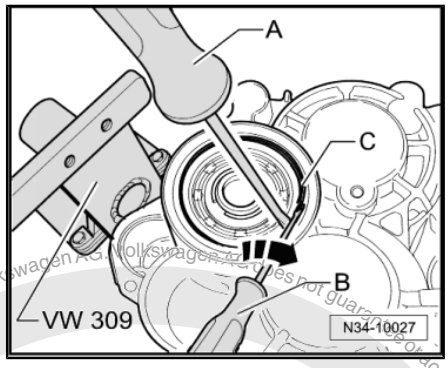

– Remove securing bolts -A- for gearbox housing to clutch housing.

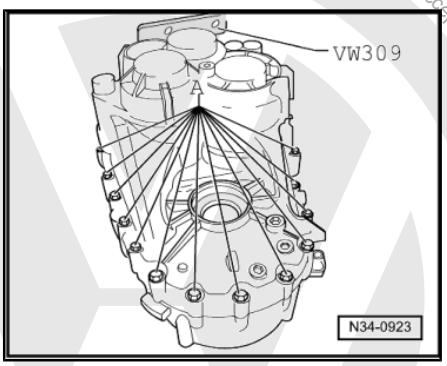

Protected by copyright. Copying for private or commercial purposes, in part or in whole, is not permitted unless authorised by Volkswagen AG. Volkswagen AG does not guarantee or accept any liability with respect to the correctness of information in this document. Copyright by Volkswagen AG.

Downloaded from www.Manualslib.com manuals search engine

– Screw adapter VW 771/40 into threaded hole of gearbox housing.

– Heat gearbox housing using hot air blower , e.g. -V.A.G 1416- in vicinity of bearing seat for deep groove ball bearing for input shaft for about 10 minutes to about 100° C.

– Using multi-purpose tool VW 771/1 , pull gearbox housing off clutch housing in -direction of arrow-.

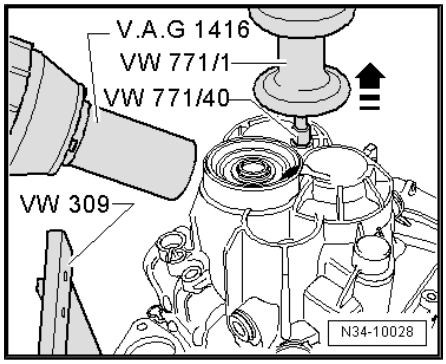

Note

If necessary, carefully apply assembly lever on alternating sides at overhanging housing shoulders along perimeter, being careful not to damage sealing surfaces.

– Remove splitter -A- and installing sleeve VW 455 or sleeve -3160- from input shaft.

To remove shafts from clutch housing, a second mechanic is required.

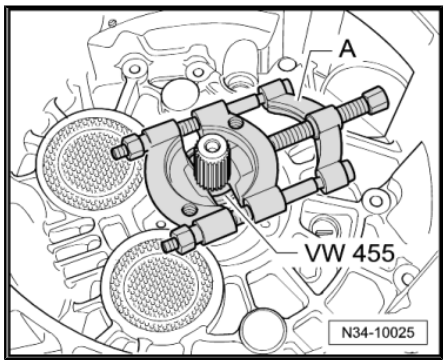

– With left hand, raise differential -1-. With right hand, lift output shaft for 1st to 4th gear together with selector rods -2- -arrow A-.

– At same time, second mechanic lifts input shaft, reverse shaft and output shaft for reverse, 5th and 6th gears -3- together with selector rods out of clutch housing -arrow B-.

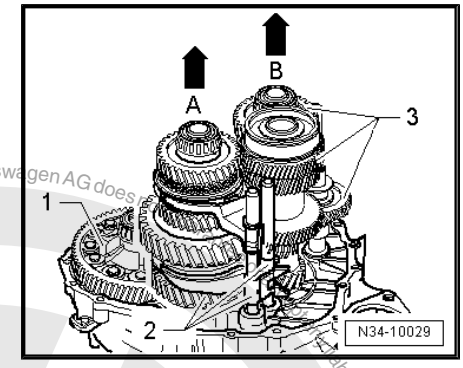

Note

After shafts are lifted, differential may be set back in clutch housing if desired.

– Remove input shaft oil seal.

Note

Always renew deep groove ball bearing on input shaft *⇒ Item 6 (page 180)* .

5.6.2 Installing

- A new deep groove ball bearing has been pressed onto the input shaft ⇒ Item 6 (page 180) .

Protected by copyright. Copying for private or commercial purposes, in part or in whole, is not permitted unless authorised by Volkswagen AG. Volkswagen AG does not guarantee or accept any liability with respect to the correctness of information in this document. Copyright by Volkswagen AG.

Downloaded from www.Manualslib.com manuals search engine

– First insert input shaft -1- and 5th and 6th gear output shaft -2- together with selector rod -3-, selector fork reverse gear -4- and reverse shaft -5-.

Note different mounting for reverse gear selector fork.

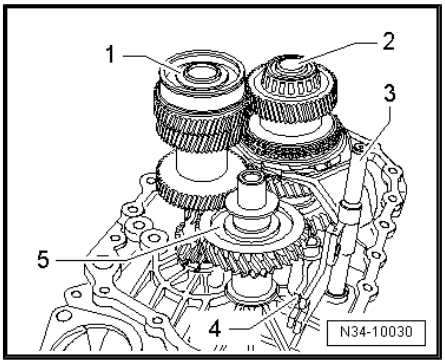

Reverse gear selector fork -1- is mounted on shaft -2- behind selector rod for 5th and 6th gear -3-.

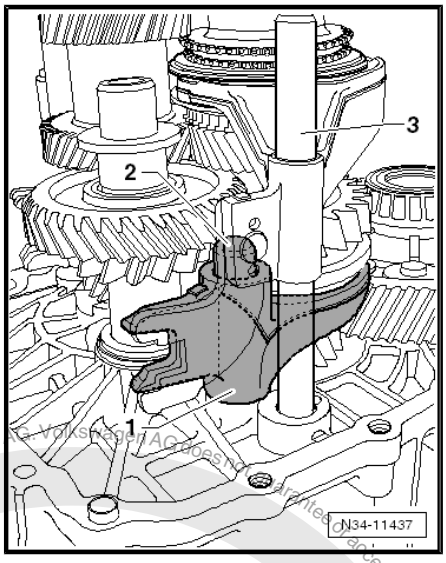

Reverse gear selector fork -1- is mounted on selector rod with selector fork for 5th and 6th gear -2-.

Continuation for all

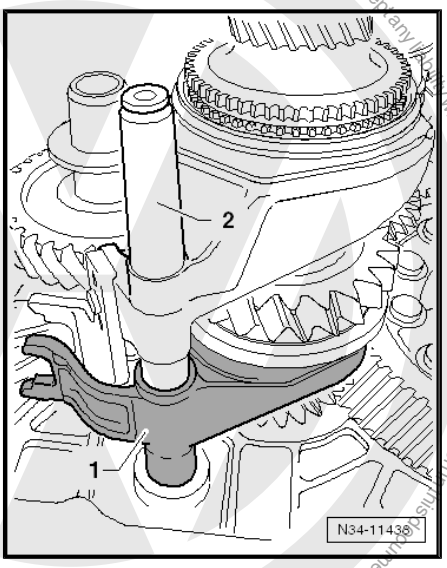

Protected by copyright. Copying for private or commercial purposes, in part or in whole, is not permitted unless authorised by Volkswagen AG. Volkswagen AG does not guarantee or accept any liability with respect to the correctness of information in this document. Copyright by Volkswagen AG.

Downloaded from www.Manualslib.com manuals search engine

– Then insert differential -1-.

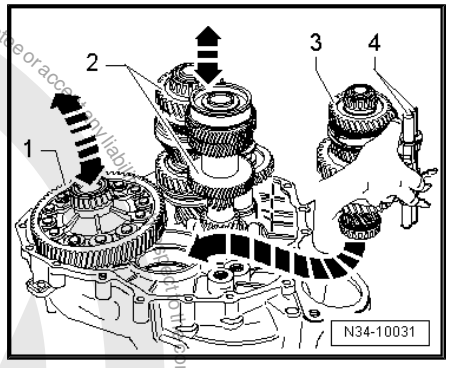

Note

A second mechanic will be required for further installation of shafts in clutch housing.

– Take output shaft for 1st through 4th gears -3- with selector rods -4- in the right hand as shown in figure.

– With the left hand, lift differential slightly.

– At the same time, a 2nd mechanic must slightly lift input shaft and output shaft for 5th and 6th gears and reverse gear -2- together with reverse gear shaft.

– Now insert output shaft for 1st through 4th gears in -direction of arrow-.

• The teeth of the input shaft, the output shafts and the final drive input gear of differential must mesh.

– Now, together with a second mechanic, place shafts and differential in their bearing seats.

– Secure support bridge -30-211A- for input shaft to clutch housing.

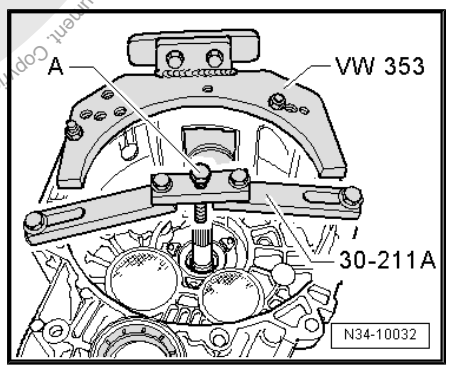

Note

For clarity of illustration, clutch housing is shown turned 180°.

– Screw in bolt -A- until input shaft rises slightly.

Deep groove ball bearing of input shaft fits into gearbox housing in only one position.

There is a flat section on deep groove ball bearing and on the bearing support for the deep groove ball bearing.

• If the flats -A- and -B- are present, no washer must be placed above or below the deep groove ball bearing ⇒ page 183 .

• Flats -A- on deep groove ball bearing and on bearing support -B- in gearbox housing must line up.

– Mark flats with coloured marks.

– Transfer markings to upper area of deep groove ball bearing and to upper area of bearing support of gearbox housing (⇒ next figure).

– Heat gearbox housing for about 10 minutes to 100° C in vicinity of seat for deep groove ball bearing of input shaft using -hot air blower- , e.g. -V.A.G 1416- .

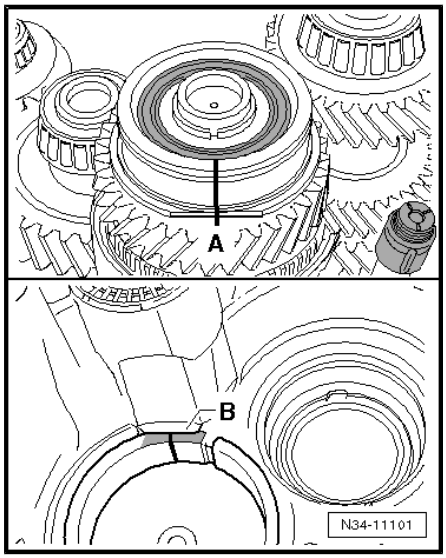

Downloaded from www.Manualslib.com manuals search engine

Note

- *Heating is necessary to avoid damage to deep groove ball bearing when gearbox housing is installed.*
- *Apply sealant -AMV 188 200 03- evenly to sealing surface of clutch housing.*
- *Line up marking on deep groove ball bearing -A- with marking on gearbox housing -B- and set gearbox housing in place.*

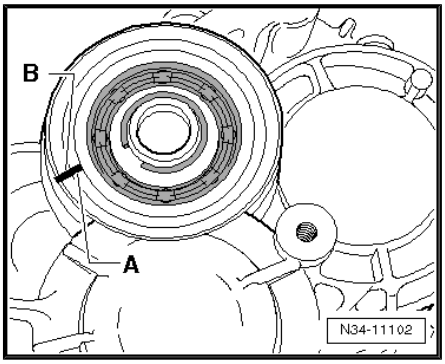

– Set gearbox housing in place and tighten new bolts -A-, -B- and -C- to specified torque.

Allocation of bolts:

A - Bolt with captive washer.

B - Bolt without washer.

C - Bolt with captive washer.

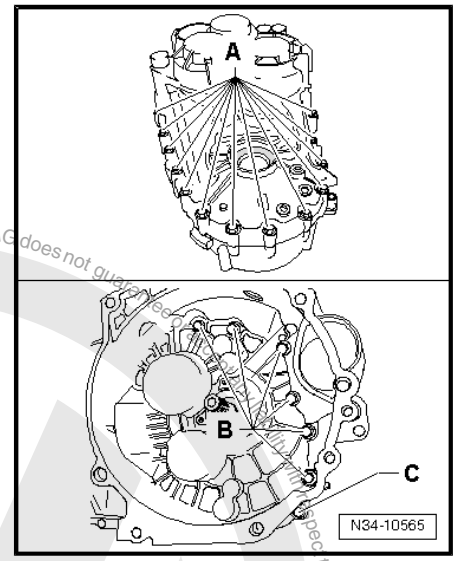

– Install retaining ring -1- for deep groove ball bearing of input shaft.
– Install support bridge -30 - 211 A- for input shaft.
– If stop sleeve for selector shaft has been removed, now drive it in to stop of tool ⇒page 163 .
– Turn gearbox in repair stand with opening for selector shaft upwards.

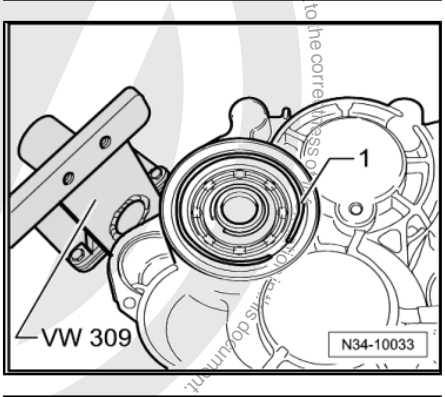

– Insert selector shaft -1- in lower bearing -2- and in selector forks -3-.

Note

For better clarity, sealing cover is removed in illustration.

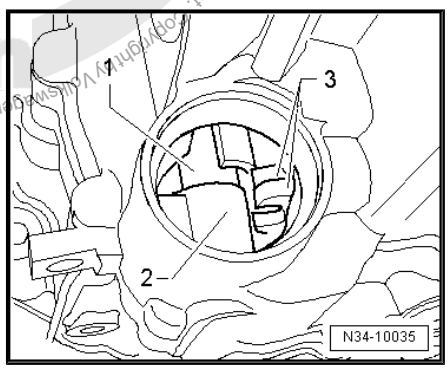

Protected by copyright. Copying for private or commercial purposes, in part or in whole, is not permitted unless authorised by Volkswagen AG. Volkswagen AG does not guarantee or accept any liability with respect to the correctness of this document. © Copyright by Volkswagen AG.

Downloaded from www.Manualslib.com manuals search engine

– Now press selector shaft -1- against stop sleeve -2- in -direction of arrow- and guide downwards with selector finger -3- through selector forks to stop.

• Selector shaft cover -4- must be parallel to bolting surface on gearbox housing.

• Selector shaft must move freely in gate selection direction (upwards and downwards).

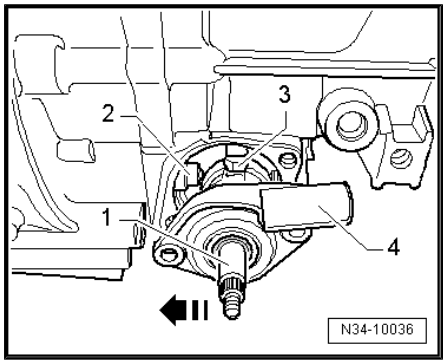

Note

If selector shaft cover is tilted relative to bolting surface, selector shaft is not inserted in lower bearing.

– Tighten bolts -3- for selector shaft cover -4-.

– Screw in locking bolt -2-, ensuring that angled rod -arrow- is not engaged.

– Install reversing light switch -F4- -1-.

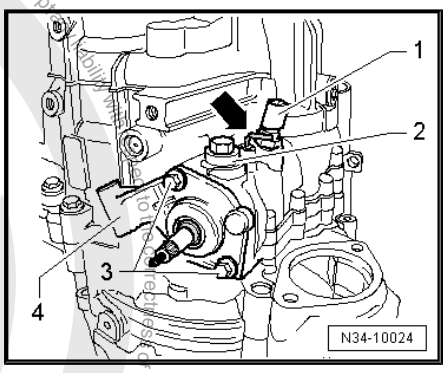

– Gearboxes for vehicles with start-stop system: fit gearbox neutral position sender -G701- -arrow- and tighten securing bolt to 6 Nm.

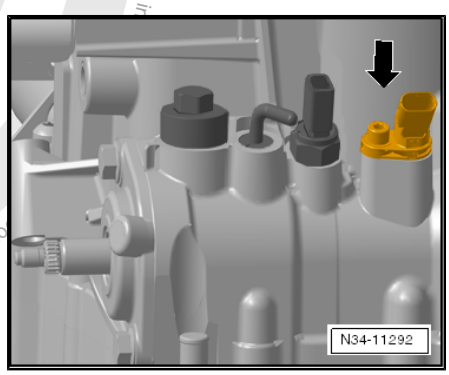

– Drive in input shaft oil seal flush.

– Install slave cylinder with release bearing ⇒ page 39 .

– Shift through all gears.

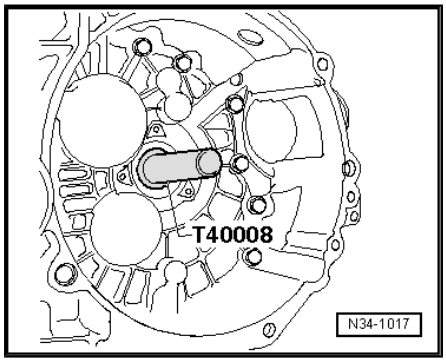

Protected by copyright. Copying for private or commercial purposes, in part or in whole, is not permitted unless authorised by Volkswagen AG. Volkswagen AG does not guarantee or accept any liability with respect to the correctness of information in this document. Copyright by Volkswagen AG.

Downloaded from www.Manualslib.com manuals search engine

– Drive sealing cover into gearbox housing to stop of thrust piece.

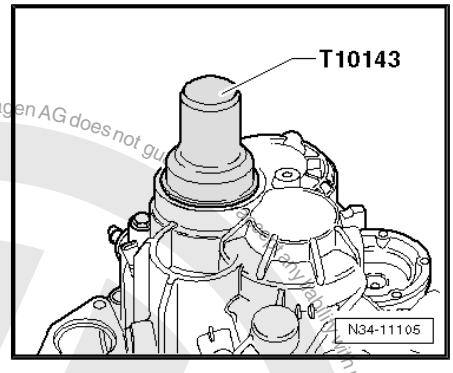

– Secure sealing cover with retaining ring -A-.

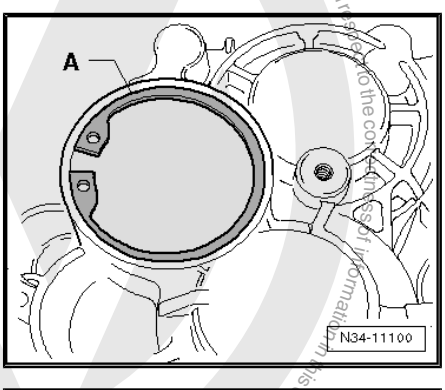

– Install flange shafts together with springs, thrust washers and tapered rings.

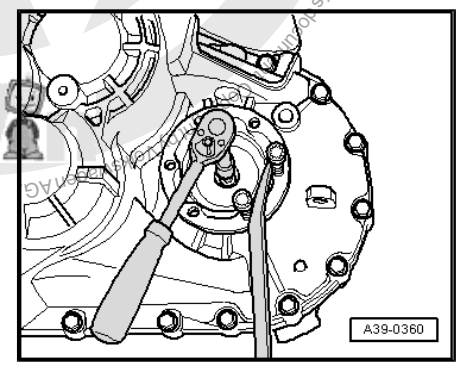

Protected by copyright. Copying for private or commercial purposes, in part or in whole, is not permitted unless authorised by Volkswagen AG. Volkswagen AG does not guarantee any liability with respect to the correctness of information in this document.

Downloaded from www.Manualslib.com manuals search engine

6 Repairing gearbox housing

Special tools and workshop equipment required

- Drift sleeve -VW 244 B-
- Gearbox support -VW 353-
- Thrust plate -VW 401-
- Thrust plate -VW 402-
- Press tool -VW 407-
- Tube -VW 416 B-

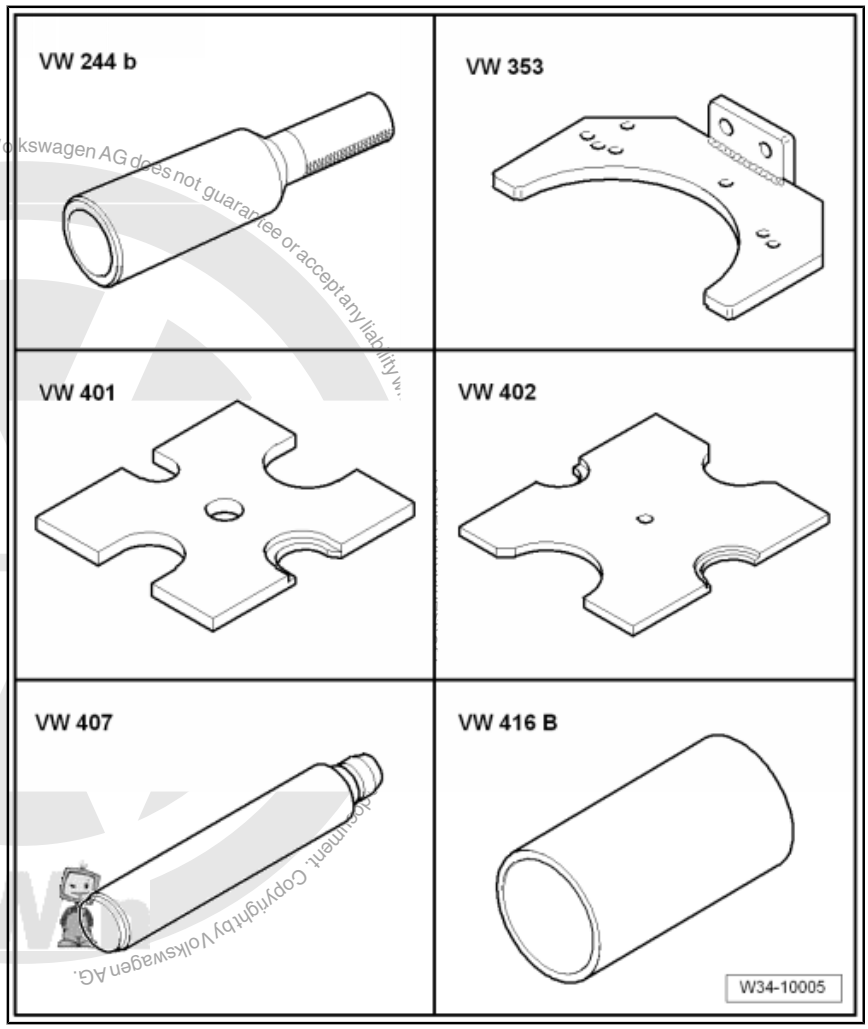

Protected by copyright. Copying for private or commercial purposes, in part or in whole, is not permitted unless authorised by Volkswagen AG. Volkswagen AG does not guarantee or accept any liability w... document. Copyright by Volkswagen AG.

Downloaded from www.Manualslib.com manuals search engine

- Guide pin -VW 436A-
- Guide pin -VW 439-
- Multipurpose tool -VW 771-
- Support plate -VW 801-
- Guide pin -10 - 15-
- Thrust piece -3124-

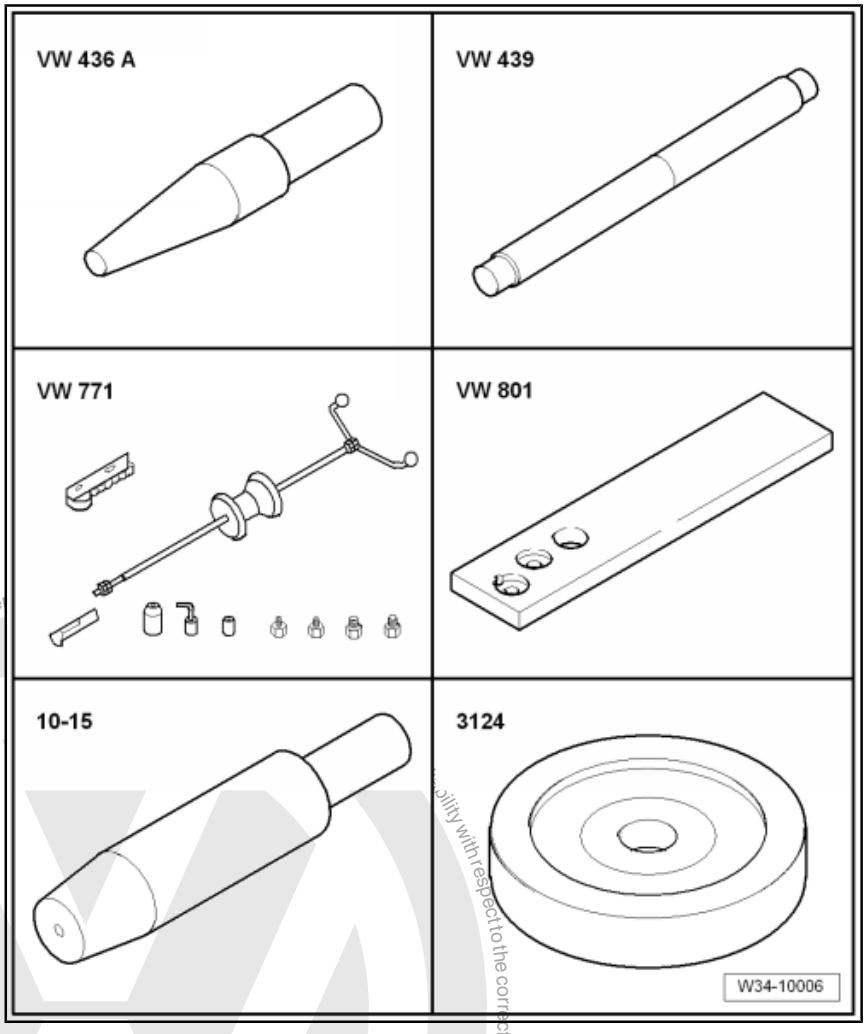

Protected by copyright. Copying for private or commercial purposes, in part or in whole, is not permitted unless authorised by Volkswagen AG. Copyright by Volkswagen AG. No liability with respect to the correctness of information in this document.

Downloaded from www.Manualslib.com manuals search engine

- Drift -3264-
- Assembly tool -3290-
- Torque wrench -V.A.G 1331-
- Drift -T10168-
- Drift -T10169- or drift -T10362- ⇒ page 163
- Thrust piece -T10203-

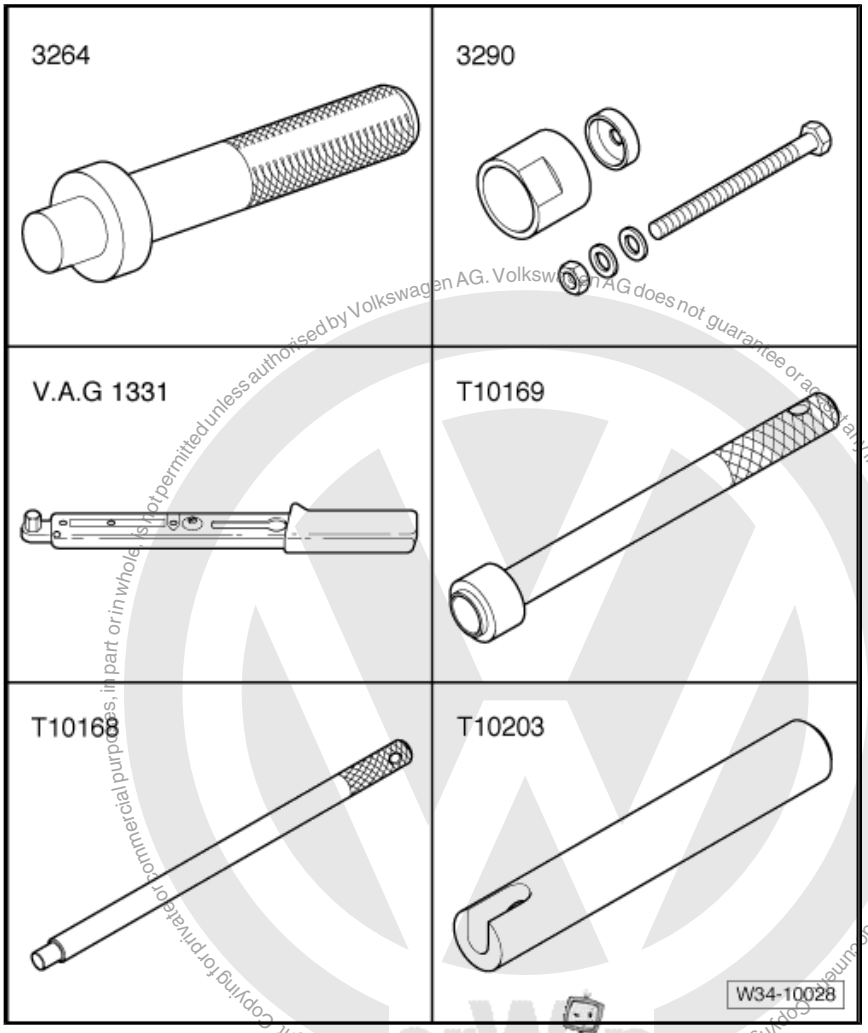

- -1- Internal puller -Kukko 21/2-

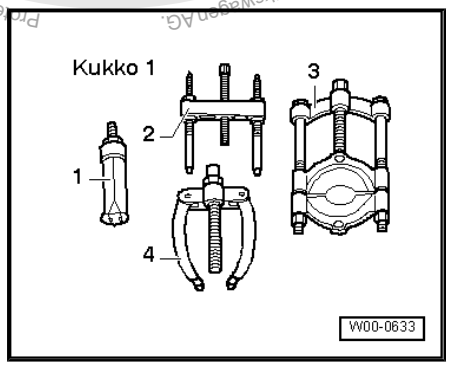

- -1- Internal puller -Kukko 21/4-
- -4- Counter support -Kukko 22/2-

Protected by copyright. Copying for private or commercial purposes, in part or in whole, is not permitted unless authorised by Volkswagen AG. Volkswagen AG does not guarantee or accept any liability with respect to the correctness of information in this document. Copyright by Volkswagen AG.

Downloaded from www.Manualslib.com manuals search engine

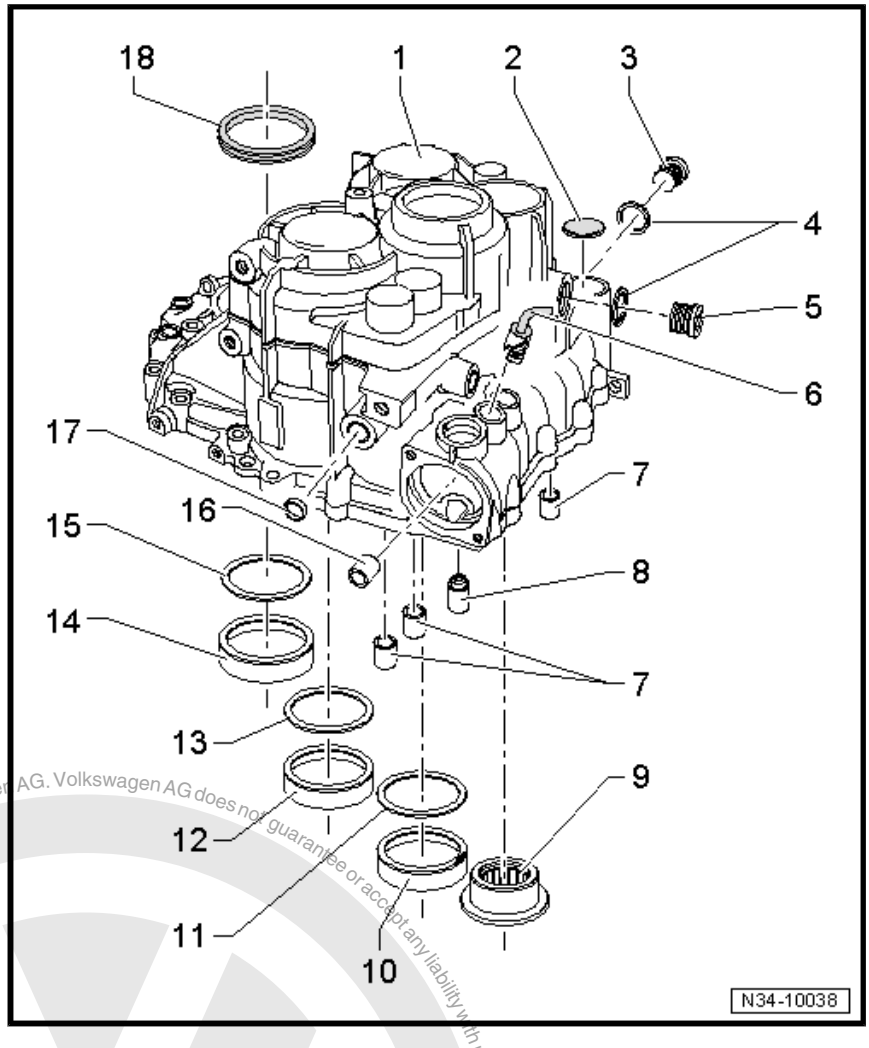

1 - Gearbox housing

- ❑ If renewed: adjust output shafts and differential ⇒ page 232
- ❑ Changes in area of support for deep groove ball bearing for input shaft ⇒ Item 3 (page 180) .
- ❑ Allocation of components via ⇒ Electronic parts catalogue (ETKA)

2 - Cover plate

- ❑ Removing ⇒ page 161
- ❑ Driving in ⇒ page 161

3 - Oil drain plug

- ❑ Torque setting ⇒ page 127

4 - Seal

- ❑ Always renew, if part of original equipment

5 - Oil filler plug

- ❑ Torque setting ⇒ page 127

6 - Angled rod

- ❑ For adjusting selector mechanism ⇒ page 82
- ❑ Can be renewed with gearbox assembled
- ❑ Removing ⇒ page 162
- ❑ Installation position ⇒ page 162
- ❑ Driving in ⇒ page 162

7 - Bearing bush

- ❑ For selector rods
- ❑ Pulling out ⇒ page 162
- ❑ Driving in ⇒ page 163

8 - Stop sleeve

- ❑ Pressing out with gearbox dismantled ⇒ page 163
- ❑ Pressing out with gearbox assembled ⇒ page 163
- ❑ Stop sleeve identification ⇒ page 163
- ❑ Drive in stop sleeve with shoulder ⇒ page 164
- ❑ Drive in stop sleeve without shoulder ⇒ page 164

9 - Needle bearing

- ❑ For reverse shaft
- ❑ Renew each time after removing
- ❑ Pulling out ⇒ page 164
- ❑ Pressing in ⇒ page 164

10 - Tapered roller bearing outer race

- ❑ For output shaft for 5th, 6th and reverse gears
- ❑ Removing and installing ⇒ page 211
- ❑ If renewed, adjust output shaft for 5th, 6th and reverse gears ⇒ page 222

Copyright by Volkswagen AG. Volkswagen AG does not guarantee or accept any liability with respect to the correctness of information in this document. Copyright by Volkswagen AG. Reproduced by permission of Volkswagen AG. This document is for personal use only and may not be reproduced in whole or in part or in any other form or for commercial purposes.

Downloaded from www.Manualslib.com manuals search engine

11 - Shim

- ❑ For output shaft for 5th, 6th and reverse gears
- ❑ Adjustment overview ⇒ page 232

12 - Tapered roller bearing outer race

- ❑ For output shaft for 1st through 4th gears
- ❑ Removing and installing ⇒ page 187
- ❑ If renewed, adjust output shaft for 1st through 4th gears ⇒ page 206

13 - Shim

- ❑ For output shaft for 1st through 4th gears
- ❑ Adjustment overview ⇒ page 232

14 - Tapered roller bearing outer race

- ❑ For differential
- ❑ Removing and installing ⇒ page 233
- ❑ If renewed, adjust differential ⇒ page 232

15 - Shim

- ❑ For differential
- ❑ Adjustment overview ⇒ page 232

16 - Bearing bush

- ❑ For selector shaft
- ❑ Pulling out ⇒ page 165
- ❑ Driving in ⇒ page 165

17 - Plug

- ❑ Driving out ⇒ page 165
- ❑ Driving in ⇒ page 166

18 - Seal

- ❑ Renewing ⇒ page 227

Protected by copyright. Copyright by Volkswagen AG. Volkswagen AG does not guarantee or accept any liability with respect to the correctness of information in this document. Copyright by Volkswagen AG. Distributed by ElsaWin. Reproduction, in whole or in part, is not permitted for commercial purposes.

Removing sealing cover -A-

– Pierce centre of sealing cover using screwdriver -B- and lever out cover -in direction of arrow-.

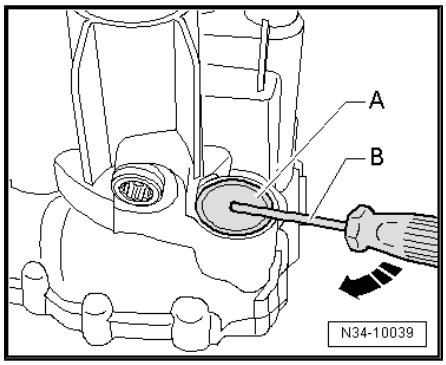

Driving in sealing cover to stop

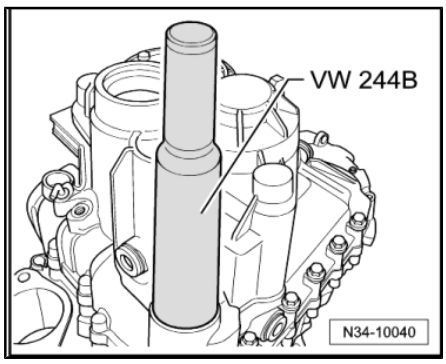

Downloaded from www.Manualslib.com manuals search engine

Removing angled rod for selector shaft

– Break off angled rod in released position.
– Insert a screwdriver -A- in hole for angled rod -B-.
– Lever out angled rod in -direction of arrow-.

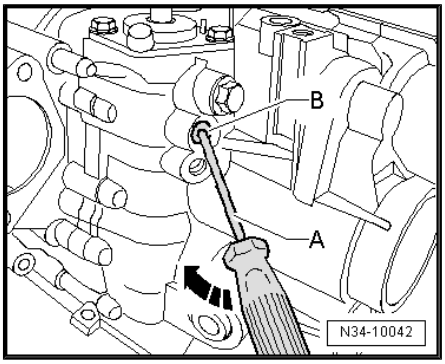

Installation position of angled rod

- Marking on angled rod -arrow- must face slave cylinder connection -1-.
- Dimension -a- must be about 45°.

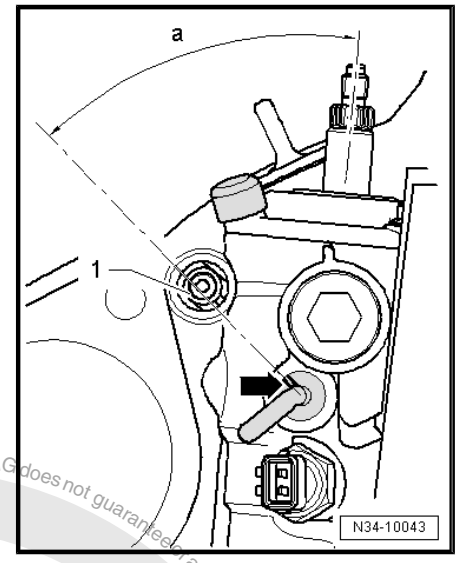

Drive in angled rod for selector shaft -arrow- to stop of tool.

Note

Angled rod must be released while it is being driven in.

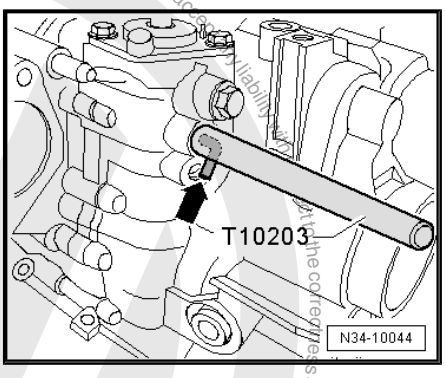

Pulling out selector rod bearing bush

A - Internal puller, 14.5 ... 18.5 mm , e.g. -Kukko 21/2-

B - Counter support , e.g. -Kukko 22/2-

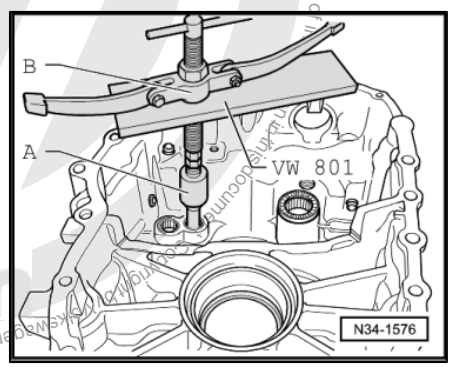

Protected by copyright. Copying for private or commercial purposes, in part or in whole is not permitted unless authorised by Volkswagen AG. Volkswagen AG does not guarantee or accept any liability with respect to the correctness of information in this document. Copyright by Volkswagen AG.

Downloaded from www.Manualslib.com manuals search engine

Driving in selector shaft bearing bush to stop of tool

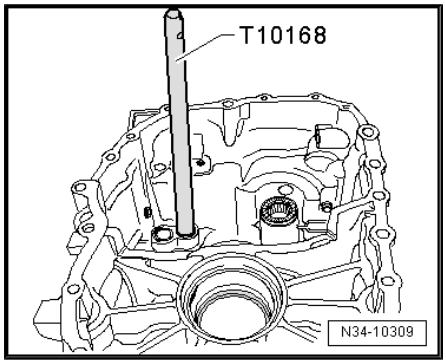

Pressing stop sleeve -A- out of gearbox housing

– Set gearbox housing on thrust plates -VW 401- and -VW 402- so that dowel sleeves in gearbox housing are not damaged.

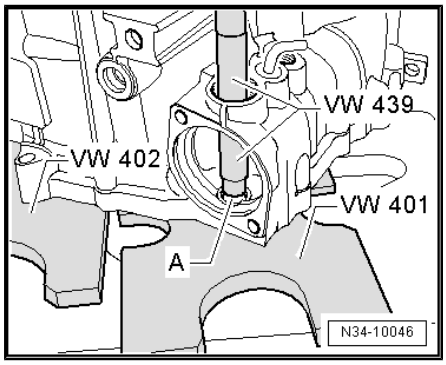

Driving stop sleeve out of assembled gearbox using guide pin -10 - 15-

- Remove locking screw and selector shaft.

– Turn gearbox so that stop sleeve does not fall in gearbox.

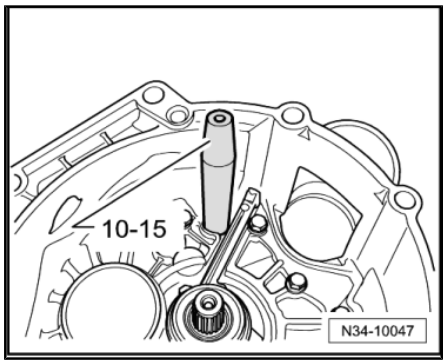

Stop sleeve identification

Following stop sleeves can be installed:

Stop sleeve with shoulder -arrow 1- ⇒ page 164 .

Stop sleeve without shoulder -arrow 2- ⇒ page 164 .

Allocate components according to ⇒ Electronic parts catalogue „ETKA“ .

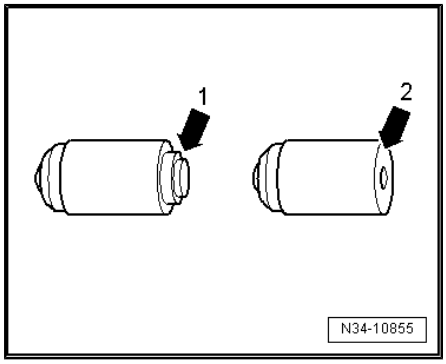

Volkswagen AG. Volkswagen AG does not guarantee or accept any liability with respect to the correctness of information in this document. Copyright by Volkswagen AG. Proof copy only. Copying for private or commercial purposes, in part or in whole, is not permitted unless authorised by Volkswagen AG.

Downloaded from www.Manualslib.com manuals search engine

Protected by copyright. Copying for private or commercial purposes, in part or in whole, is not permitted unless authorised by Volkswagen AG. Volkswagen AG does not guarantee or accept any liability with respect to the correctness of information in this document. Copyright by Volkswagen AG.

Drive in stop sleeve with shoulder until tool makes contact

- Clutch housing bolted to gearbox housing.

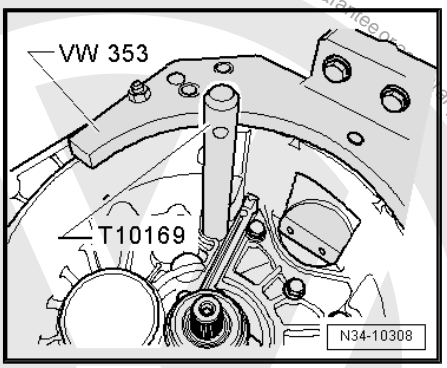

Drive in stop sleeve without shoulder until tool makes contact

- Clutch housing bolted to gearbox housing.

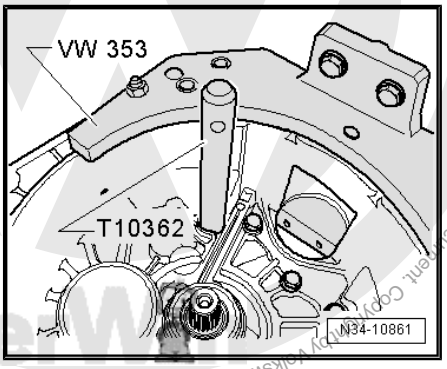

Pulling reverse shaft needle bearing out of gearbox housing

A - Internal puller, 23.5 … 30 mm , e.g. -Kukko 21/4-

B - Counter support , e.g. -Kukko 22/2-

Note

The needle bearing is destroyed during removal and must be renewed.

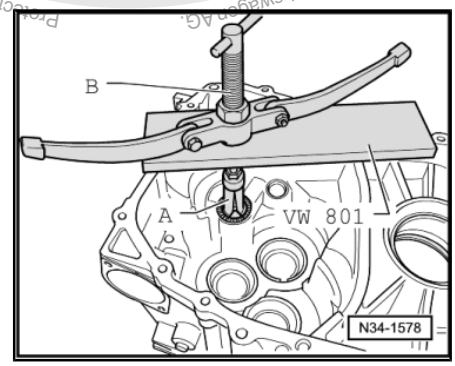

Pressing needle bearing -A- into gearbox housing

– Before pressing in, lay reverse shaft thrust washer -B- on needle bearing.

– Support gearbox housing with tube -VW 416 B- directly below bearing support.

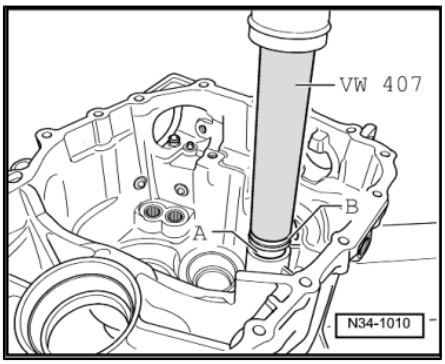

Downloaded from www.Manualslib.com manuals search engine

Pulling out selector shaft bearing bush

– Use thread adapter from counter support -Kukko 22/1- -arrow-.

– Hold spindle of assembly tool -3290- securely and turn nut -B-.

A - Internal puller, 14.5 … 18.5 mm , e.g. -Kukko 21/2-

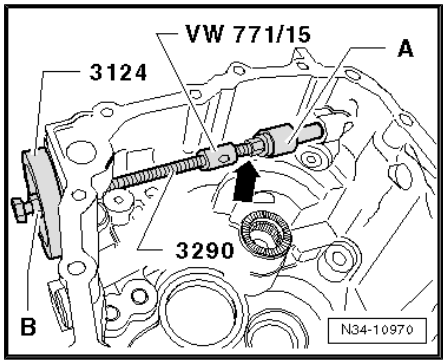

Driving in selector shaft bearing bush -A- to stop of tool.

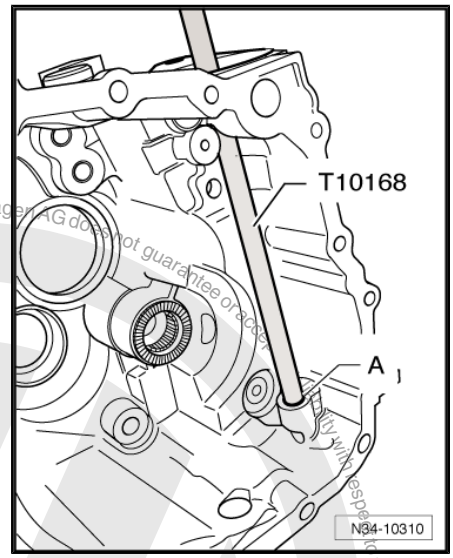

Driving out plug -1-

– Drive in plug -1- outwards from inside gearbox housing.

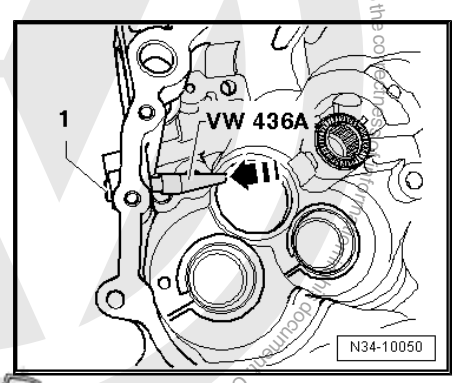

Protected by copyright. Copying for private or commercial purposes, in part or in whole, is not permitted unless authorised by Volkswagen AG. Volkswagen AG does not guarantee or accept any liability with respect to the correctness of information in this document. Copyright by Volkswagen AG.

Downloaded from www.Manualslib.com manuals search engine

Driving in plug -1-

– Drive in sealing plug to dimension -a-, about 3 mm below upper edge of housing, using drift -3264- .

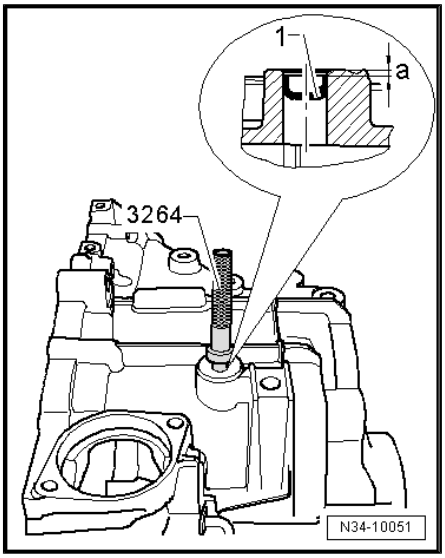

Protected by copyright. Copying for private or commercial purposes, in part or in whole, is not permitted unless authorised by Volkswagen AG. Volkswagen AG does not guarantee or accept any liability with respect to the correctness of information in this document. Copyright by Volkswagen AG.

Downloaded from www.Manualslib.com manuals search engine

7 Repairing clutch housing

Special tools and workshop equipment required

- Press tool -VW 407-
- Drift -T10168-
- Thrust piece -T40008-
- -1- Internal puller -Kukko 21/2-
- -1- Internal puller -Kukko 21/4-
- -4- Counter support -Kukko 22/1-
- -4- Counter support -Kukko 22/2-

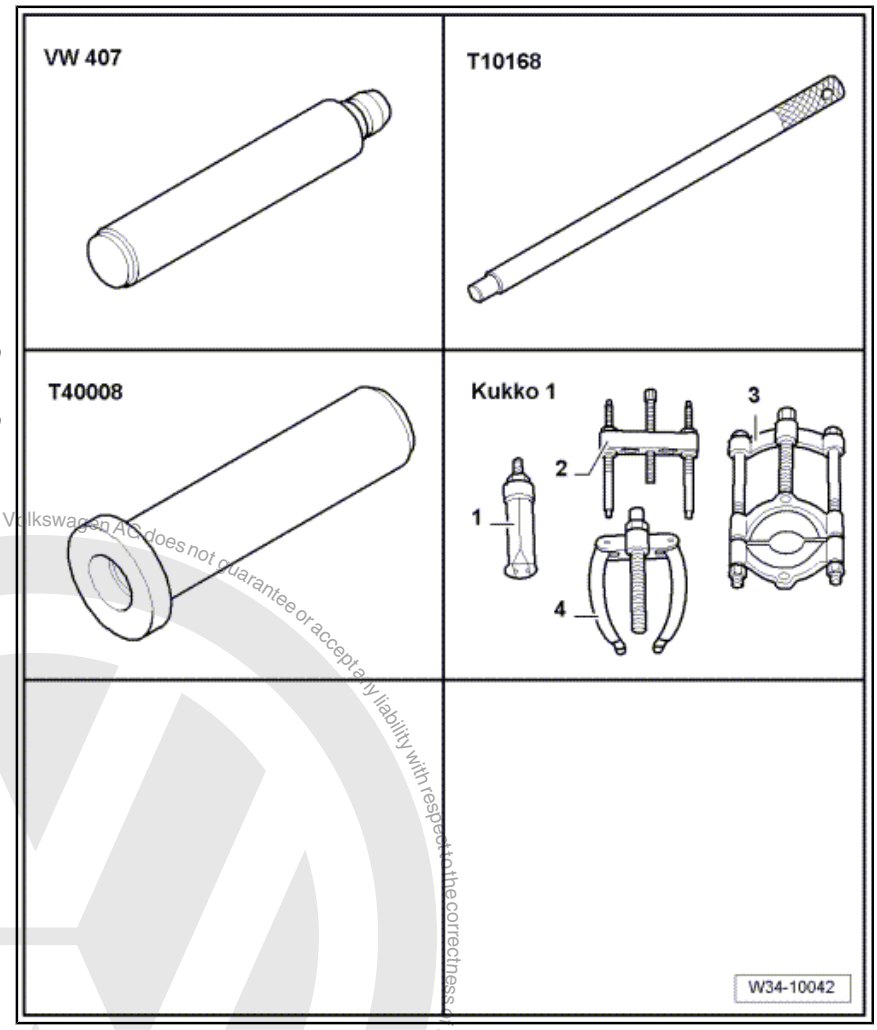

Protected by copyright. Copying for private or commercial purposes, in part or in whole, is not permitted unless authorised by Volkswagen AG. Volkswagen AG does not guarantee or accept any liability with respect to the correctness of information in this document. Copyright by Volkswagen AG.

Downloaded from www.Manualslib.com manuals search engine

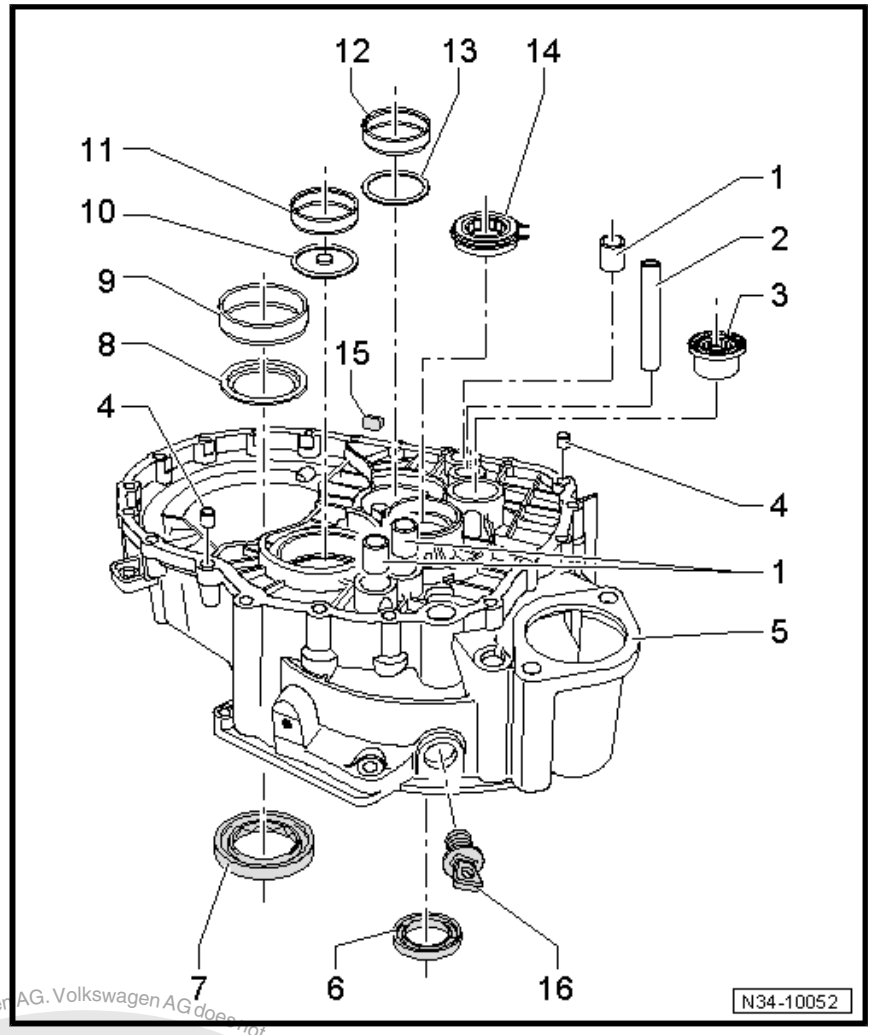

1 - Bearing bush

- ❑ For selector rods
- ❑ Renew each time after removing
- ❑ Pulling out ⇒ page 169
- ❑ Driving in ⇒ page 169

2 - Reverse gear selector fork axle

- ❑ Axle cannot be removed with workshop tools
- ❑ If a new clutch housing is used, a new axle must be pressed in ⇒ page 171
- ❑ Place reverse gear selector fork onto shaft ⇒ page 152
- ❑ If shaft is not present, mounting on selector rod for selector fork for 5th and 6th gear ⇒ page 152
- ❑ Allocation of components via ⇒ Electronic parts catalogue (ETKA)

3 - Needle bearing

- ❑ For reverse shaft
- ❑ Renew each time after removing
- ❑ Pulling out ⇒ page 170
- ❑ Pressing in ⇒ page 170

4 - Dowel sleeve

- ❑ Qty. 2

5 - Clutch housing

- ❑ If renewed: adjust output shafts and differential ⇒ page 232

6 - Input shaft seal

- ❑ Removing ⇒ page 170
- ❑ Driving in ⇒ page 170

7 - Seal

- ❑ Renewing ⇒ page 229

8 - Washer

- ❑ For differential
- ❑ Installation position: shoulder on inner circumference faces seal ⇒ Item 7 (page 168)

9 - Tapered roller bearing outer race

- ❑ For differential
- ❑ Removing and installing ⇒ page 233
- ❑ If renewed, adjust differential ⇒ page 239

10 - Oil deflector ring

- ❑ Installation position: shoulder on hole faces output shaft

11 - Tapered roller bearing outer race

- ❑ For output shaft for 1st through 4th gears

Copyright by Volkswagen AG. Volkswagen AG does not guarantee or accept any liability with respect to the correctness of information in this document. Copyright by Volkswagen AG. Protected by copyright. Copying for private or commercial purposes, in part or in whole, is not permitted unless authorised by Volkswagen AG.

Downloaded from www.Manualslib.com manuals search engine

- ❑ Removing and installing ⇒ page 187
- ❑ If renewed, adjust output shaft for 1st through 4th gears ⇒ page 206

12 - Tapered roller bearing outer race

- ❑ For output shaft for 5th, 6th and reverse gears
- ❑ Removing and installing ⇒ page 211
- ❑ If renewed, adjust output shaft for 5th, 6th and reverse gears ⇒ page 222

13 - Washer

- ❑ For output shaft for 5th, 6th and reverse gears
- ❑ Always 0.65 mm thick

14 - Cylindrical roller bearing

- ❑ For input shaft
- ❑ Removing and installing ⇒ page 178

15 - Magnet

- ❑ Held in place by housing joint surface

16 - Cap

- ❑ Not fitted in all clutch housings

Pulling out selector rod bearing bush

A - Counter support , e.g. -Kukko 22/1-

B - Internal puller, 14.5 … 18.5 mm , e.g. -Kukko 21/2-

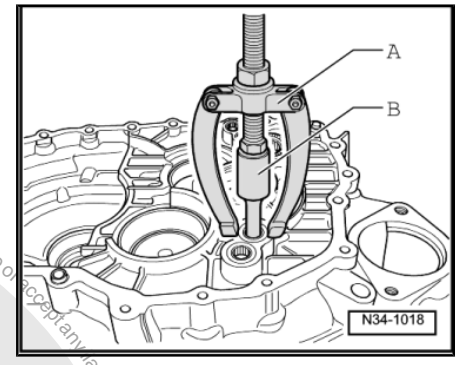

Driving in selector shaft bearing bush to stop of tool

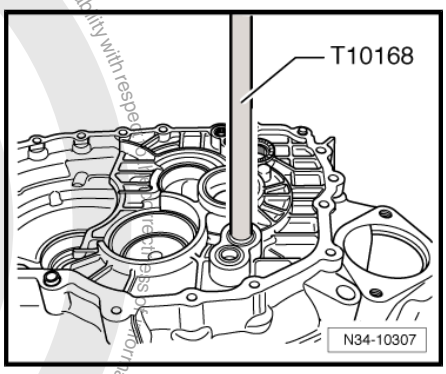

Protected by copyright. Copying for private or commercial purposes, in part or in whole, is not permitted unless authorised by Volkswagen AG. Volkswagen AG does not guarantee or accept any liability with respect to the suitability of information in this document. Copyright by Volkswagen AG.

Downloaded from www.Manualslib.com manuals search engine

Pulling needle bearing out of clutch housing

A - Counter support , e.g. -Kukko 22/2-

B - Internal puller, 23.5 … 30 mm , e.g. -Kukko 21/4-

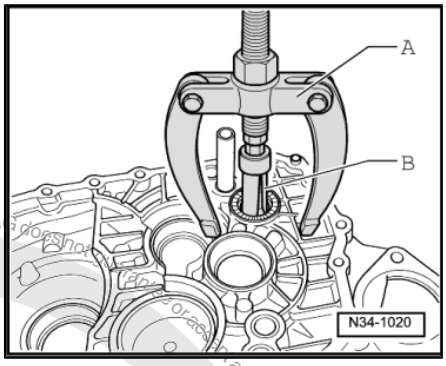

Note

The needle bearing is destroyed during removal and must be renewed.

Pressing needle bearing -A- into clutch housing

– Before pressing in, lay reverse shaft thrust washer -B- on needle bearing.

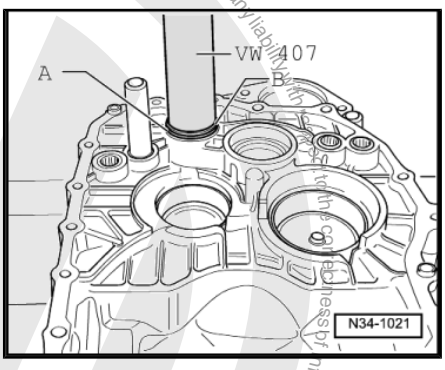

Removing input shaft oil seal

Note

When gearbox is removed, oil seal can be removed with drift.

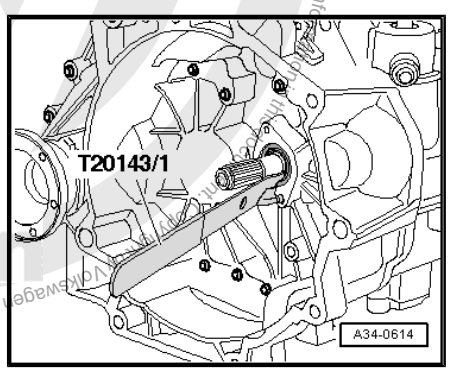

Driving in input shaft oil seal flush

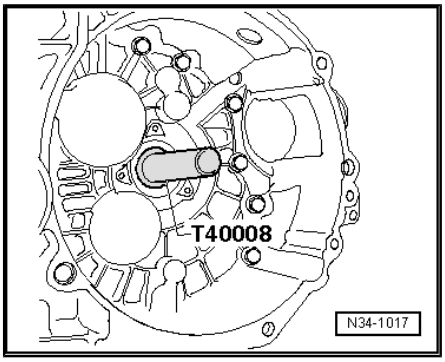

Protected by copyright. Copying for private or commercial purposes, in part or in whole, is not permitted unless authorised by Volkswagen AG. Volkswagen AG does not guarantee or accept any liability with respect to the correctness of information in this repair manual. Copyright by Volkswagen AG.

Downloaded from www.Manualslib.com manuals search engine

Protected by copyright. Copying for private or commercial purposes, in part or in whole, is not permitted unless authorised by Volkswagen AG. Volkswagen AG does not guarantee or accept any liability with respect to the correctness of information in this document. Copyright by Volkswagen AG.

Pressing reverse gear selector fork shaft into clutch housing

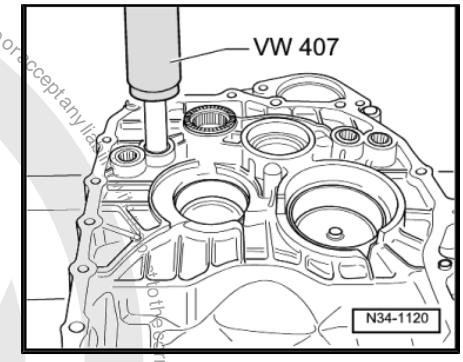

Downloaded from www.Manualslib.com manuals search engine

8 Repairing selector unit

Note

Lubricate bearing points and running surfaces with grease -G 000 450 02- .

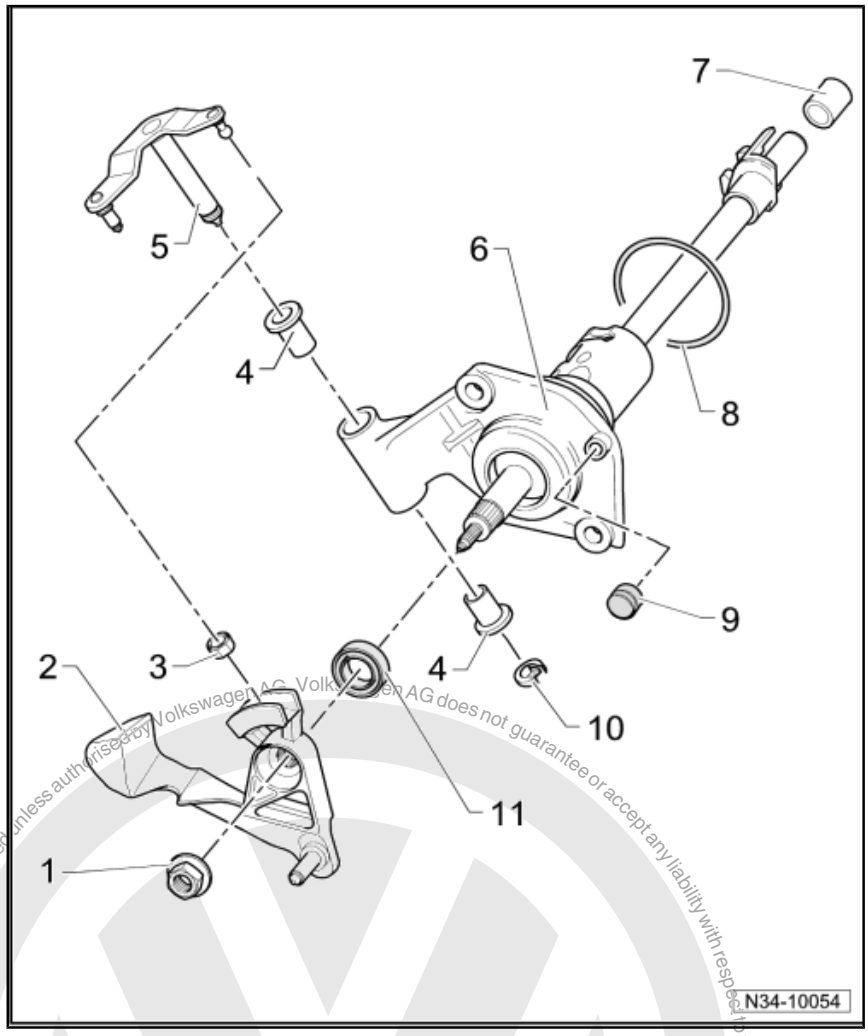

1 - Hexagon nut, 23 Nm
- ❑ Self-locking
- ❑ Always renew

2 - Gearbox selector lever
- ❑ Install so that master spline aligns with selector shaft
- ❑ Can be renewed with the selector mechanism installed
- ❑ Installation position ⇒ page 74
- ❑ After installing, adjust selector mechanism ⇒ page 82

3 - Shoe
- ❑ Clip into relay lever ⇒ Item 5 (page 172)

4 - Bearing bush
- ❑ Not required for plastic relay lever

5 - Relay lever
- ❑ Installation position ⇒ page 74
- ❑ After installing, adjust selector mechanism, ⇒ page 82
- ❑ From 05.07, plastic relay lever ⇒ page 75

6 - Selector unit
- ❑ Consists of selector shaft and selector shaft cover
- ❑ Components cannot be separated from each other
- ❑ Can be removed and installed with gearbox installed

7 - Bearing bush
- ❑ For selector shaft
- ❑ Removing and installing ⇒ Item 16 (page 161)

8 - O-ring
- ❑ Insert in peripheral groove of selector mechanism cover
- ❑ Coat with gear oil when installing
- ❑ Always renew

9 - Cap
- ❑ For gearbox breather

Protected by copyright. Copying for private or commercial purposes, in part or in whole, is not permitted unless authorised by Volkswagen AG. Volkswagen AG does not guarantee or accept any liability with respect to the correctness of information in this document. Copyright by Volkswagen AG.

Downloaded from www.Manualslib.com manuals search engine

10 - Lock washer

- ❑ For relay lever
- ❑ Not fitted on plastic relay lever
- ❑ Always renew

11 - Seal for selector shaft

- ❑ Renewing ⇒ page 173

8.1 Renewing oil seal for selector shaft

Special tools and workshop equipment required

- ♦ Tube -VW 423-

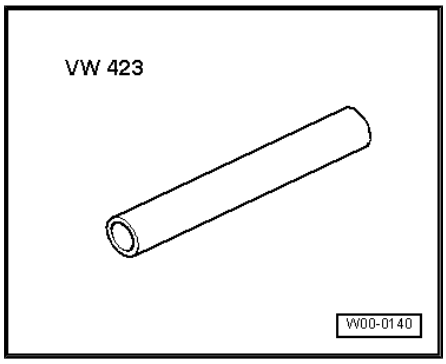

- ♦ Oil seal extractor lever -T20143/1-

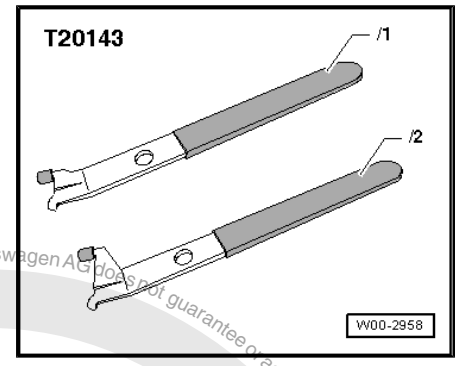

- ♦ Sealing grease -G 052 128 A1-

– Remove complete air filter housing if it is over selector shaft ⇒ Rep. gr. 23 ; Repairing diesel direct injection system or ⇒ Rep. gr. 24 ; Repairing injection system

Protected by copyright. Copying for private or commercial purposes, in part or in whole, is not permitted unless authorised by Volkswagen AG. Volkswagen AG does not guarantee or accept any liability with respect to the correctness of information in this document. Copyright by Volkswagen AG.

Downloaded from www.Manualslib.com manuals search engine

Metal relay lever

– Pull off securing clip -2- and press relay lever -3- to side out of mounting.

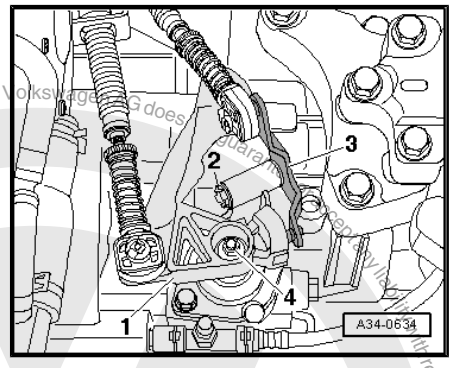

Note

If relay lever cannot be removed due to gearbox bracket, remove gate selector cable from relay lever. Guide shoe out of gearbox selector lever.

Plastic relay lever

– Remove relay lever together with cable end-piece ⇒ page 75 .

Continued for all selector mechanisms

– Remove nuts -4- and remove gearbox selector lever -1-.

– Lever out seal using oil seal extractor lever -T20143/1- .

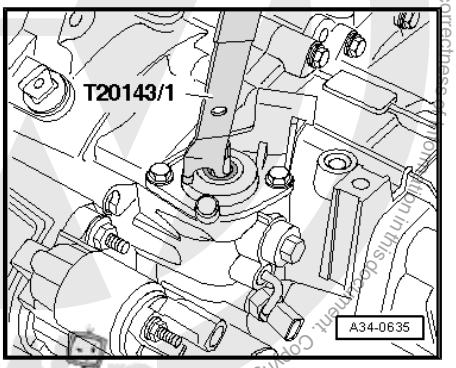

– Lightly oil outer circumference of new oil seal.

– Fill space between sealing lip and dust lip -arrow- with sealing grease -G 052 128 A1- .

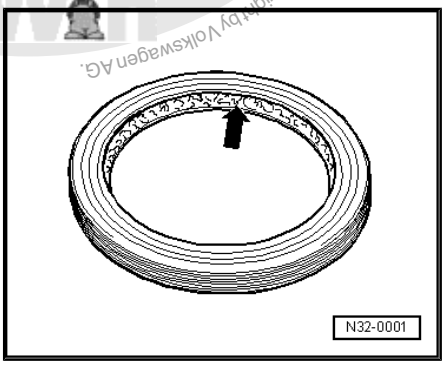

– Drive in seal using thrust piece -VW 423- .

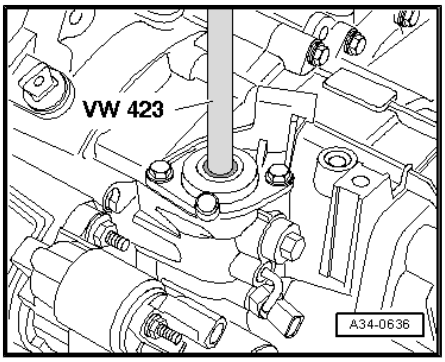

Carry out further installation in the reverse sequence noting the following points:

– Install gearbox selector lever on selector shaft of gearbox and tighten hexagon nut to specified torque ⇒ Item 1 (page 172) .

Note

The gearbox selector lever can be installed in only one position.

– Adjust selector mechanism ⇒ page 82 .

– If removed, install complete air filter housing ⇒ Rep. gr. 23 ; Repairing diesel direct injection system or ⇒ Rep. gr. 24 ; Repairing injection system .

Downloaded from www.Manualslib.com manuals search engine

9 Repairing selector forks

Special tools and workshop equipment required

- Thrust plate -VW 402-
- Press tool -VW 411-
- Tube -VW 426-
- Thrust piece -VW 431-
- -1- Internal puller -Kukko 21/3-
- -4- Counter support -Kukko 22/1-

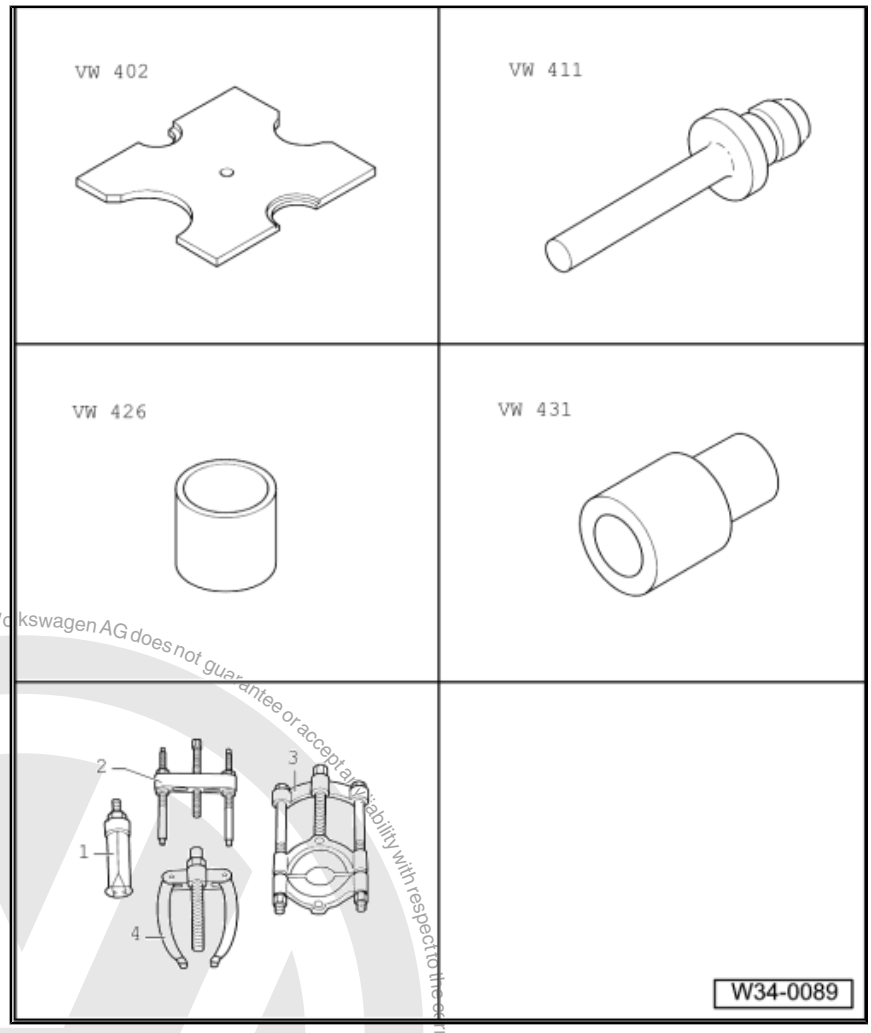

Protected by copyright. Copying for private or commercial purposes, in part or in whole, is not permitted unless authorised by Volkswagen AG. Volkswagen AG does not guarantee or accept any liability with respect to the correctness of information in this document. Copyright by Volkswagen AG.

Downloaded from www.Manualslib.com manuals search engine

1 - Rubber dampers

- ❑ Can be removed from and inserted in selector rod by hand

2 - Selector rod with selector fork for 1st and 2nd gears

3 - Selector rod with selector fork for 3rd and 4th gears

4 - Selector rod with selector fork for 5th and 6th gears

5 - Selector fork for reverse gear

- ❑ Is mounted on shaft for reverse gear selector fork ⇒ page 152
- ❑ From gearbox manufacture date 06 03 6, ball sleeve ⇒ Item 6 (page 176) is discontinued
- ❑ Gradually discontinued
- ❑ Reverse gear selector fork is modified
- ❑ If shaft for reverse gear selector fork is not present, mounting on selector rod for selector fork for 5th and 6th gear ⇒ page 152
- ❑ Distinguishing between reverse gear selector forks ⇒ page 176
- ❑ Allocation of components via ⇒ Electronic parts catalogue (ETKA)

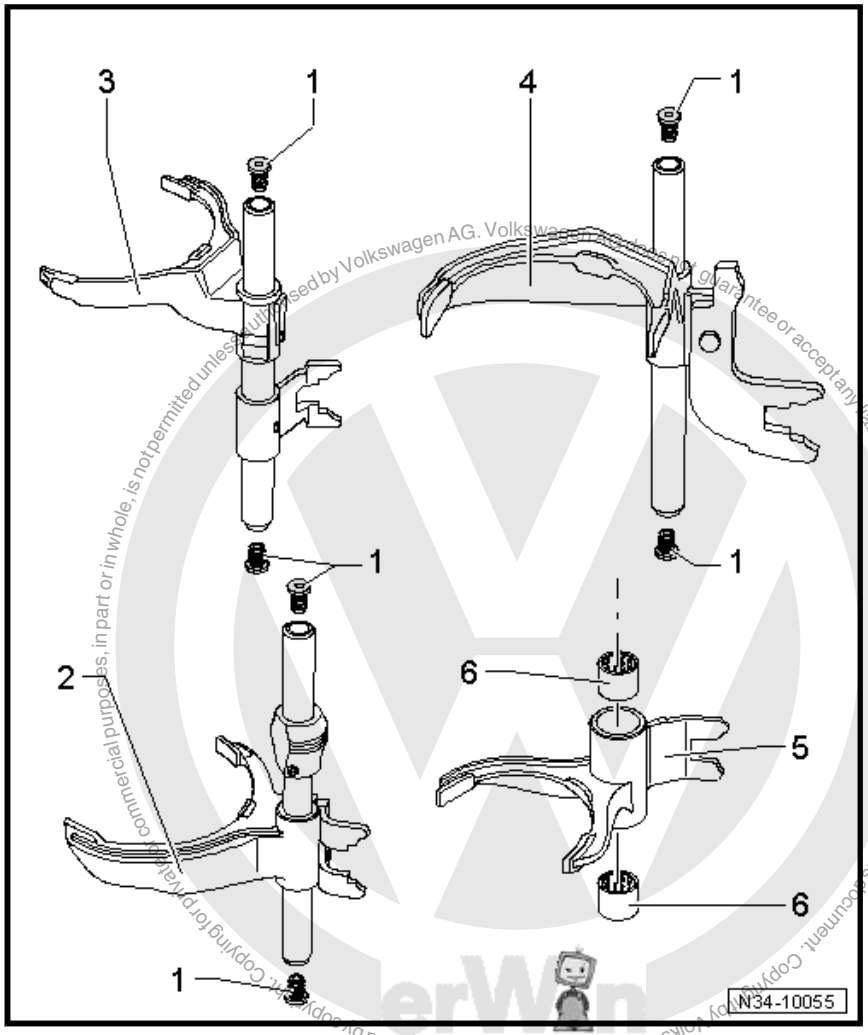

6 - Ball sleeve

- ❑ Pulling out ⇒ page 177
- ❑ Pressing in ⇒ page 177
- ❑ From gearbox manufacture date 06 03 6, ball sleeve is discontinued
- ❑ Gradually discontinued

Distinguishing between reverse gear selector forks

Dim. „a“ mm	Selector fork for reverse gear	Mounting
24	With ball sleeve	On reverse gear selector fork shaft ⇒ page 152
18	Without ball sleeve	
15	Without ball sleeve	On selector rod with selector fork for 5th and 6th gears ⇒ page 152

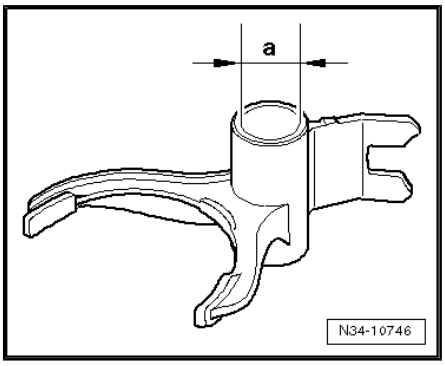

Downloaded from www.Manualslib.com manuals search engine

Through gearbox manufacture date 05 03 6 - pulling out ball sleeve for reverse gear selector fork

A - Internal puller, 18 … 23 mm , e.g. -Kukko 21/3-

B - Counter support , e.g. -Kukko 22/1-

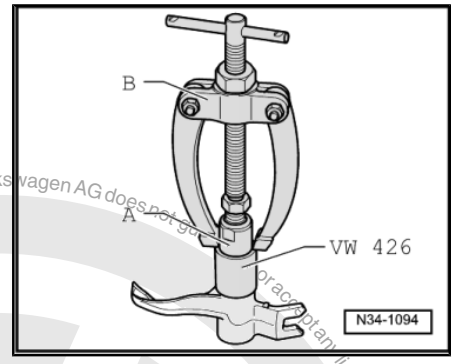

Through gearbox manufacture date 05 03 6 - pressing in ball sleeve for reverse gear selector fork

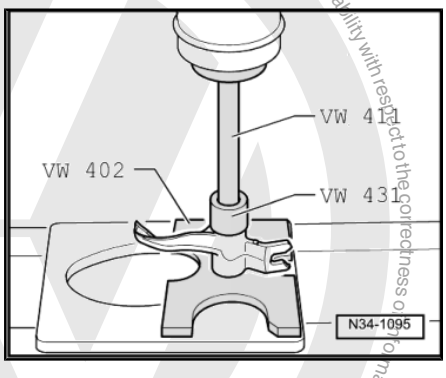

Protected by copyright. Copying for private or commercial purposes, in part or in whole, is not permitted unless authorised by Volkswagen AG. Volkswagen AG does not give any guarantee or accept any liability with respect to the correctness of information in this document. Copyright by Volkswagen AG.

Downloaded from www.Manualslib.com manuals search engine

35 – Gears, shafts

1 Input shaft

1.1 Dismantling and assembling input shaft

Special tools and workshop equipment required

- Thrust plate -VW 401-
- Thrust plate -VW 402-
- Press tool -VW 407-
- Press tool -VW 412-
- Thrust piece -VW 431-
- Thrust piece -VW 432-

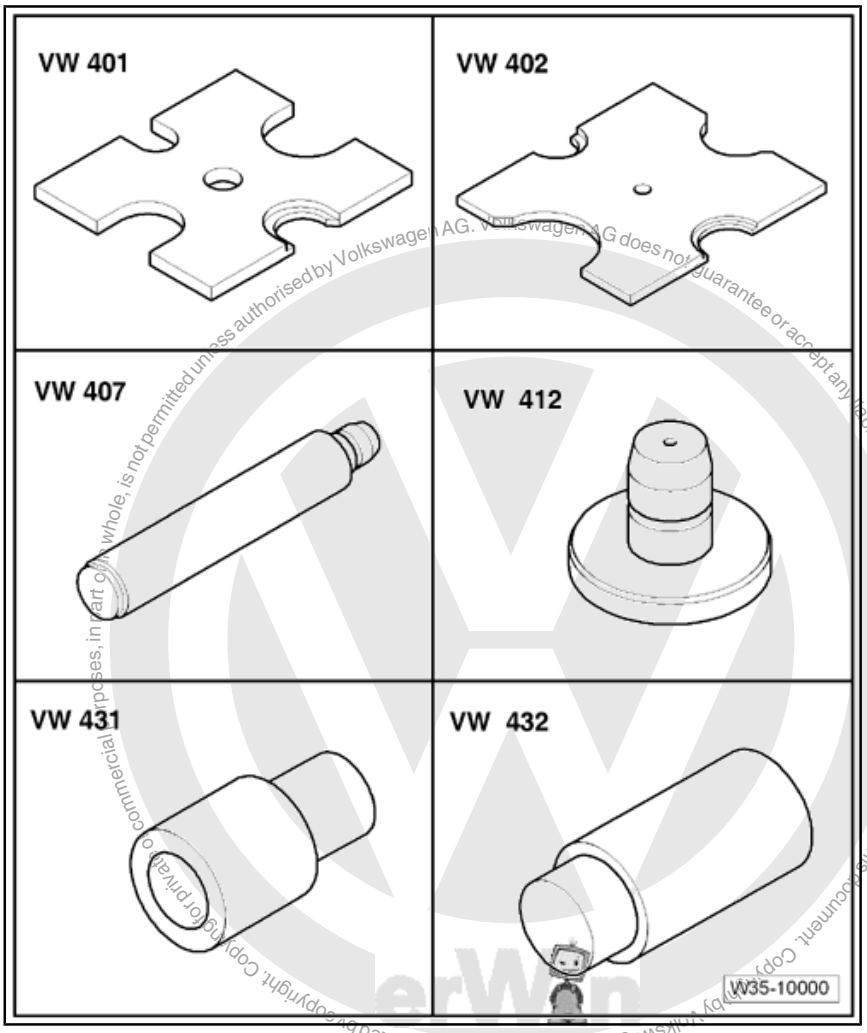

Protected by copyright. Copying for private or commercial purposes, in part or in whole, is not permitted unless authorised by Volkswagen AG. Volkswagen AG does not guarantee or accept any liability with respect to the correctness of information in this document. Copyright by Volkswagen AG.

Downloaded from www.Manualslib.com manuals search engine

- Thrust piece -VW 454-
- Thrust piece -30 - 505-
- Thrust plate -40 - 105-
- Tube -2040-
- -1- Internal puller -Kukko 21/5-
- -2- Puller -Kukko 18/1-
- -3- Splitter -Kukko 17/1-
- -3- Splitter -Kukko 17/2-
- -4- Counter support -Kukko 22/2-

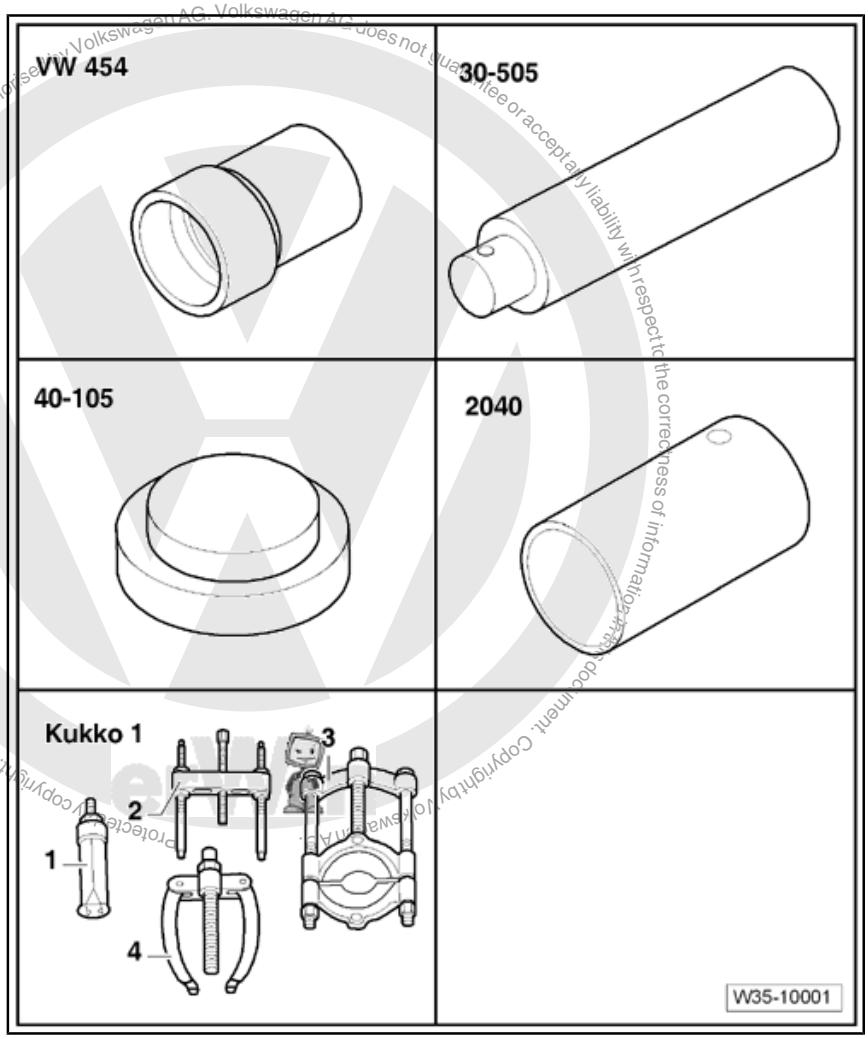

Volkswagen AG. Volkswagen AG does not guarantee or accept any liability with respect to the correctness of information in this document. Copyright by Volkswagen AG. Protected by copyright. Copying for private or commercial purposes, in part or in whole, is not permitted unless authorised by Volkswagen AG.

Note

- *Install all bearings on input shaft with gear oil.*
- *Always renew deep groove ball bearing* *⇒ Item 6 (page 180)* *.*

Downloaded from www.Manualslib.com manuals search engine

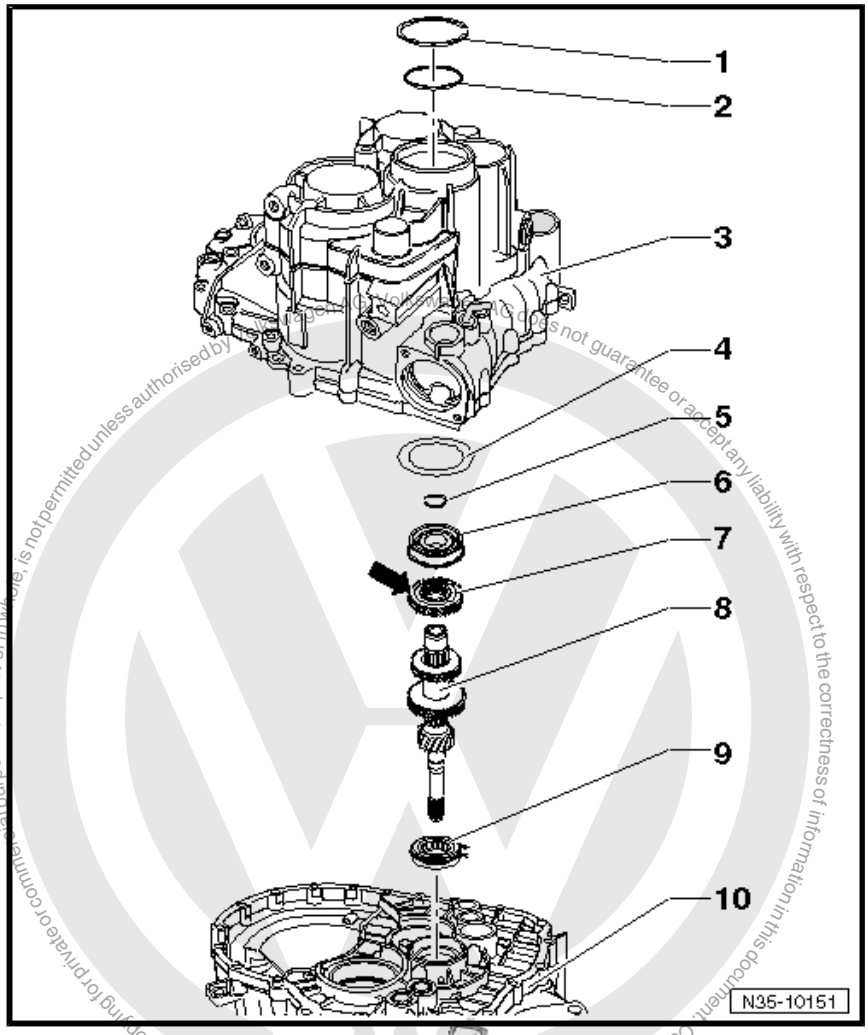

1 - Retaining ring

- For deep groove ball bearing of input shaft ⇒ Item 6 (page 180)
- Removing and installing ⇒ page 134

2 - Washer

- Outer diameter = 78.6 mm
- May be used only in modified gearbox housings (from gearbox date 10 04 6 through around gearbox date 20 01 8) ⇒ page 183
- Allocation of components via ⇒ Electronic parts catalogue (ETKA)

3 - Gearbox housing

- From gearbox date 10 04 6 through around gearbox date 20 01 8, modified in vicinity of seat for deep groove ball bearing ⇒ Item 6 (page 180) , washers ⇒ Item 2 (page 180) and ⇒ Item 4 (page 180) , ⇒ page 183
- From around gearbox date 21 01 8, flats on deep groove ball bearing and on bearing support for deep groove ball bearing ⇒ page 183
- Allocation of components via ⇒ Electronic parts catalogue (ETKA)

4 - Washer

- Outer diameter = 85 mm
- May be used only in modified gearbox housings (from gearbox date 10 04 6 through around gearbox date 20 01 8) ⇒ page 183
- Allocation of components via ⇒ Electronic parts catalogue (ETKA)

5 - Retaining ring

- If deep groove ball bearing ⇒ Item 6 (page 180) and input shaft ⇒ Item 8 (page 181) are renewed, redetermine ⇒ page 182

6 - Deep groove ball bearing

- Always renew
- Pulling off ⇒ page 181
- Installation position ⇒ page 182
- Pressing on ⇒ page 182
- From around gearbox date 21 01 8, flats on deep groove ball bearing and on bearing support for deep groove ball bearing ⇒ page 184

7 - Gear wheel for 5th gear

- Offered as replacement part together with input shaft
- Pressing off ⇒ page 181
- Installation position: peripheral groove -arrow- faces deep groove ball bearing ⇒ Item 6 (page 180)

Downloaded from www.Manualslib.com manuals search engine

- ❑ Pressing on ⇒ page 181

8 - Input shaft

- ❑ With gear wheels for 3rd, 4th and 6th gears

9 - Cylindrical roller bearing

- ❑ With retaining ring
- ❑ Pulling out ⇒ page 183
- ❑ Pressing in ⇒ page 183
- ❑ Installation position: retaining ring in bearing faces input shaft

10 - Clutch housing

Pulling off deep groove ball bearing

– First remove retaining ring from input shaft.

– Before setting up pulling device, set thrust piece -VW 431- and thrust plate -40 - 105- on input shaft.

– Apply splitter -B- to peripheral groove for retaining ring in bearing.

A - Puller , e.g. -Kukko 18/1-

B - Splitter, 12 … 75 mm , e.g. -Kukko 17/1-

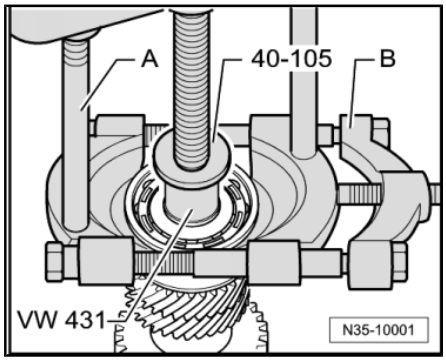

Pressing off 5th gear wheel

A - Splitter, 22 … 115 mm , e.g. -Kukko 17/2-

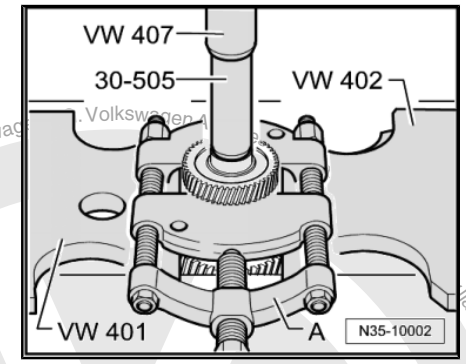

Pressing on gear wheel for 5th gear

Groove -arrow- in wheel must face upwards.

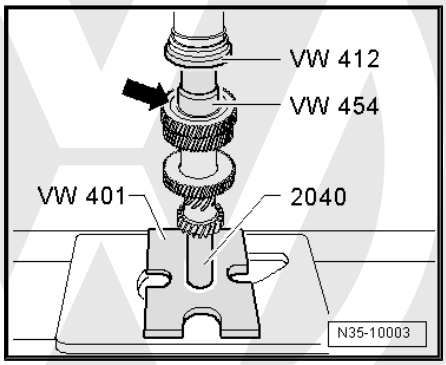

Protected by copyright. Copying for private or commercial purposes, in part or in whole, is not permitted unless authorised by Volkswagen AG. Copyright by Volkswagen AG. No liability with respect to the correctness of information in this document.

Downloaded from www.Manualslib.com manuals search engine

Pressing on deep groove ball bearing

Deep groove ball bearing with a rubber ring -arrow-

Shoulder -A- faces press tool -VW 412- .

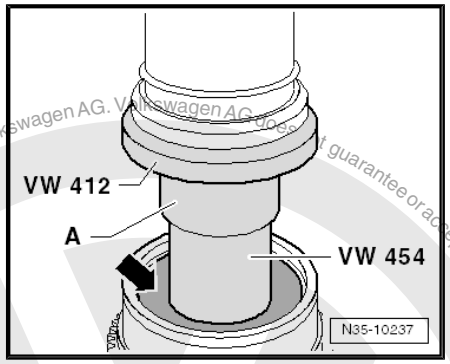

Installation position of deep groove ball bearing

Groove for retaining ring faces upwards -arrow A- and shoulder -arrow B- must face gear wheel for 5th gear.

– Determine and install retaining ring ⇒ page 182 .

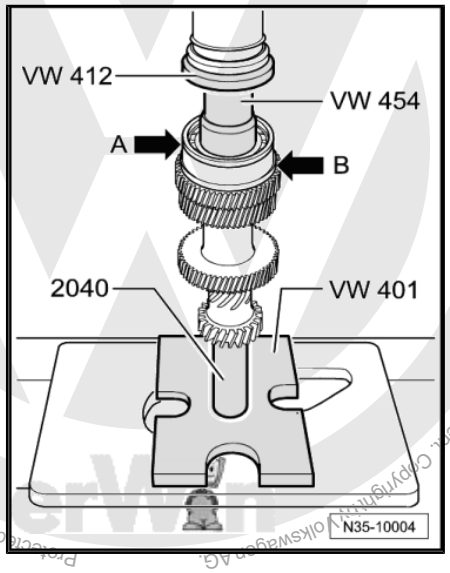

Determining thickness of retaining ring

– Insert a 1.86 mm thick retaining ring -A- in groove of input shaft and press upwards.

– Measure distance between deep groove ball bearing -B- and installed retaining ring -A- using feeler gauge -C-.

– Remove retaining ring used for measuring purposes.

– Determine retaining ring from table.

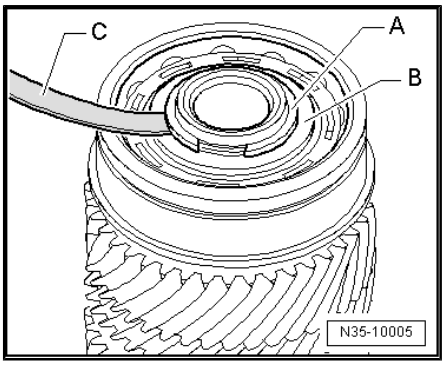

Note

Allocate retaining rings according to ⇒ Electronic parts catalogue „ETKA“ .

The following retaining rings are available:

Measured value (mm)	Retaining ring thickness (mm)	Axial play (mm)
0.01…0.05	1.86	0.01…0.05
0.05…0.07	1.89	0.01…0.05
0.07…0.10	1.92	0.01…0.05
0.10…0.13	1.95	0.01…0.05
0.13…0.16	1.98	0.01…0.05

Protected by copyright. Copying for private or commercial purposes, in part or in whole, is not permitted unless authorised by Volkswagen AG. Volkswagen AG does not guarantee or accept any liability with respect to the correctness of information in this document. Copyright by Volkswagen AG.

Downloaded from www.Manualslib.com manuals search engine

Pulling cylinder roller bearing out of clutch housing

– When pulling out, squeeze together retaining ring -arrow- of cylindrical roller bearing, using pliers -C-.

A - Counter support , e.g. -Kukko 22/2-

B - Internal puller, 30 … 37 mm , e.g. -Kukko 21/5-

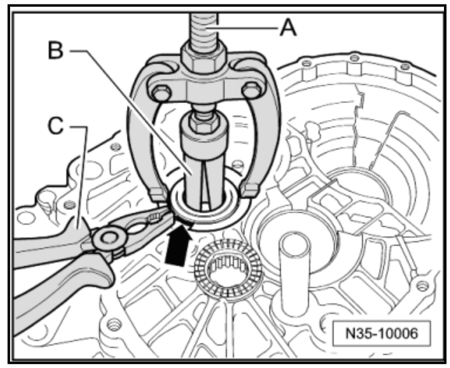

Pressing cylindrical roller bearing into clutch housing

– When pressing in, squeeze together retaining ring -arrow- of cylinder roller bearing, using pliers -A-.

– Remove pliers before cylindrical roller bearing is in installation position. Retaining ring must engage in groove of clutch housing.

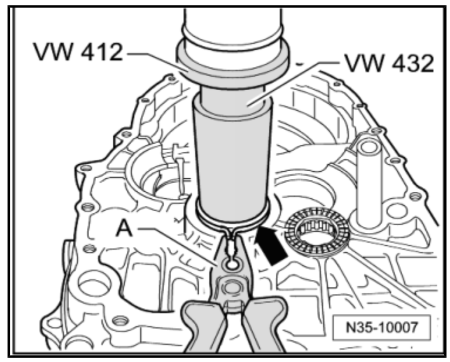

Protected by copyright. Copying for private or commercial purposes, in part or in whole, is not permitted unless authorised by Volkswagen AG. Volkswagen AG does not guarantee or accept any liability with respect to the correctness of information in this document. Copyright by Volkswagen AG.

1.1.1 Modification in area of deep groove ball bearing

From gearbox date 10 04 6 through around gearbox date 20 01 8:

One washer above and one below bearing seat for deep groove ball bearing ⇒ Item 6 (page 180) .

Above bearing seat:

Bearing seat		Washer above bearing seat
Through gearbox date 09 04 6	Dimension „a“ = 10 mm	no
From gearbox date 10 04 6 through around gearbox date 20 01 8:	Dimension „a“ = 10.7 mm	yes
From around gearbox date 21 01 8	Below bearing seat: flat for deep groove ball bearing	no

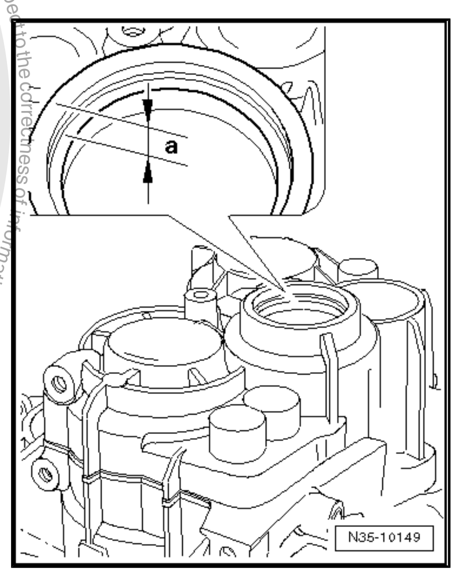

Beneath bearing seat:

Downloaded from www.Manualslib.com manuals search engine

From gearbox date 10 04 6 through around gearbox date 20 01 8 slightly deeper

In order for the washer beneath the deep groove ball bearing ⇒ Item 6 (page 180) to fit, the bearing seat for the deep groove ball bearing -arrow- is machined out slightly.

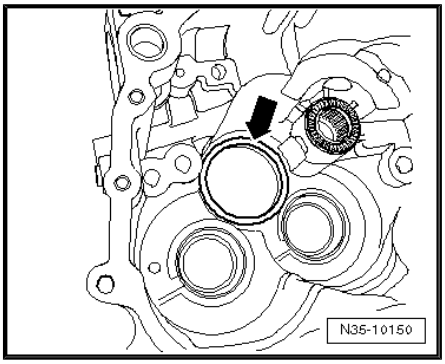

Beneath bearing seat:		Washer beneath bearing seat
Through gearbox date 09 04 6	Not further machined	no
From gearbox date 10 04 6 through around gearbox date 20 01 8:	Machined slightly deeper	yes
From around gearbox date 21 01 8	Flat -B- for deep groove ball bearing -A-	no

From around gearbox date 21 01 8, flats on deep groove ball bearing -A- and on bearing support -B- of gearbox housing

- If the flats are present, no washer must be placed above or below the deep groove ball bearing.

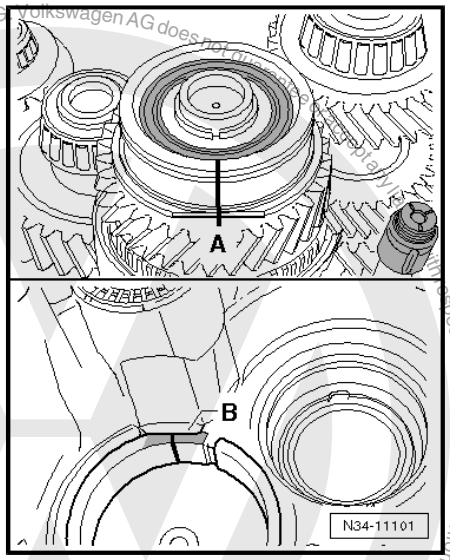

Protected by copyright. Copyright for private or commercial purposes, in part or in whole, is not permitted unless authorised by Volkswagen AG. Volkswagen AG does not guarantee or accept any liability with respect to the correctness of information in this document. Copyright by Volkswagen AG.

Downloaded from www.Manualslib.com manuals search engine

2 Output shaft for 1st through 4th gears

2.1 Assembly overview - output shaft for 1st through 4th gears

Dismantling and assembling output shaft for 1st through 4th gears
⇒ page 187 .

Note

- *If output shaft or tapered roller bearings have been renewed, adjust output shaft* ⇒ page 206 .
- *Always renew both tapered roller bearings together as a set.*

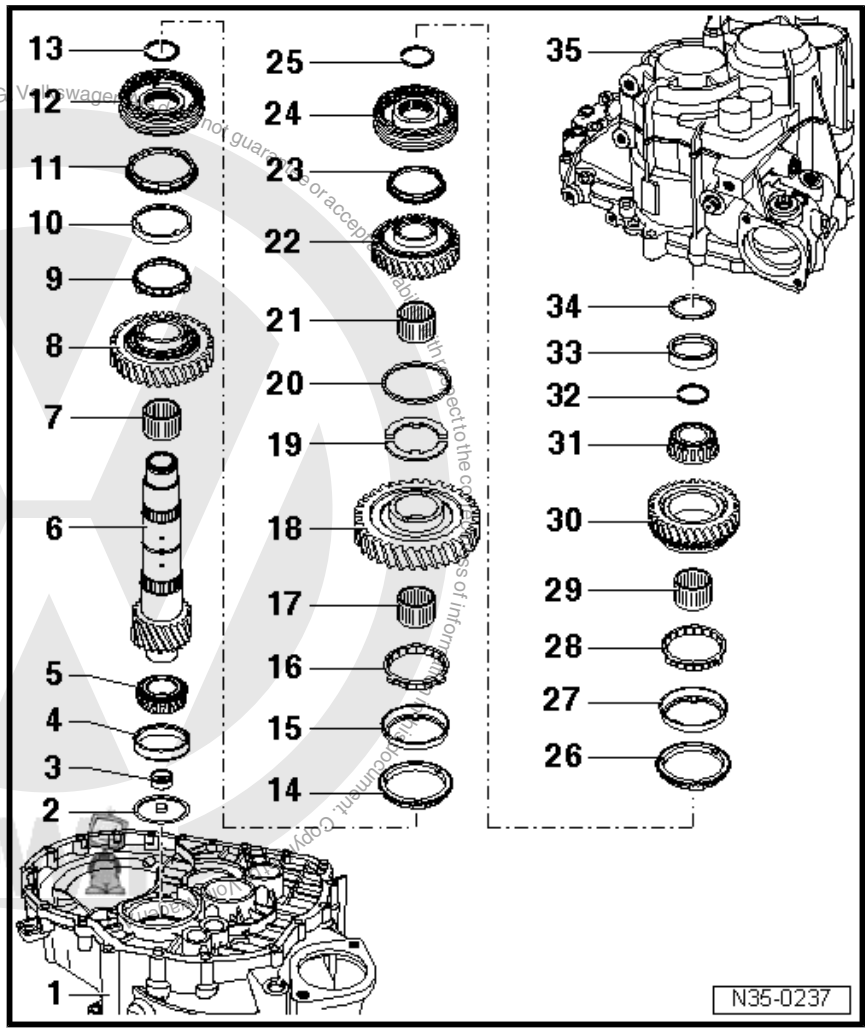

1 - Clutch housing

2 - Oil deflector ring

3 - Dished washer
- ❑ Pulling out ⇒ page 192
- ❑ Pressing in ⇒ page 192

4 - Tapered roller bearing outer race
- ❑ Pulling out ⇒ page 193
- ❑ Pressing in ⇒ page 193

5 - Tapered roller bearing inner race
- ❑ Pressing off ⇒ page 192
- ❑ Pressing on ⇒ page 193

6 - Output shaft
- ❑ For 1st through 4th gears
- ❑ Adjusting ⇒ page 206

7 - Needle bearing
- ❑ For 2nd gear

8 - Synchromeshed gear for 2nd gear
- ❑ 1st/2nd gear synchronisation modified from gearbox date 26 10 9, differentiation ⇒ page 195

9 - Synchro-ring (inner ring for 2nd gear)
- ❑ 1st/2nd gear synchronisation modified from gearbox date 26 10 9, differentiation ⇒ page 195

10 - Outer ring for 2nd gear
- ❑ 1st/2nd gear synchronisation modified from gearbox date 26 10 9, differentiation ⇒ page 195

11 - Synchro-ring for 2nd gear
- ❑ 1st/2nd gear synchronisation modified from gearbox date 26 10 9, differentiation ⇒ page 195

Downloaded from www.Manualslib.com manuals search engine

12 - Locking collar with synchro-hub for 1st and 2nd gears

- After removing retaining ring ⇒ Item 13 (page 186) , press off with synchromeshed gear for 2nd gear ⇒ page 195
- Dismantling ⇒ page 197
- Assembling locking collar and synchro-hub ⇒ page 197
- 1st/2nd gear synchronisation modified from gearbox date 26 10 9, differentiation ⇒ page 195

13 - Retaining ring

14 - Synchro-ring for 1st gear

- 1st/2nd gear synchronisation modified from gearbox date 26 10 9, differentiation ⇒ page 195

15 - Outer ring for 1st gear

- 1st/2nd gear synchronisation modified from gearbox date 26 10 9, differentiation ⇒ page 195

16 - Synchro-ring (inner ring for 1st gear)

- 1st/2nd gear synchronisation modified from gearbox date 26 10 9, differentiation ⇒ page 195

17 - Needle bearing

- For 1st gear

18 - Synchromeshed gear for 1st gear

- 1st/2nd gear synchronisation modified from gearbox date 26 10 9, differentiation ⇒ page 195

19 - Thrust washer

- For 1st through 4th gears
- Qty. 2
- Insert lugs of thrust washer in holes of output shaft

20 - Washer

- Holds thrust washers ⇒ Item 19 (page 186) in position on output shaft

21 - Needle bearing

- For 4th gear

22 - Synchromeshed gear for 4th gear

23 - Synchro-ring for 4th gear

- Check for wear ⇒ page 199

24 - Locking collar with synchro-hub for 3rd and 4th gears

- After removing retaining ring ⇒ Item 25 (page 186) , pull off with 4th gear synchromeshed gear ⇒ page 195
- Dismantling ⇒ page 197
- Installation position, locking collar and synchro-hub ⇒ page 199
- Assembling locking collar and synchro-hub ⇒ page 197 and ⇒ page 197
- Pressing on ⇒ page 199

25 - Retaining ring

26 - Synchro-ring for 3rd gear

- Check for wear ⇒ page 196

27 - Outer ring for 3rd gear

- Insert in synchro-ring ⇒ Item 26 (page 186) ; installation position ⇒ page 198
- Renew if scored

28 - Synchro-ring (inner ring for 3rd gear)

- Check for wear ⇒ page 196
- Check lugs for scoring
- Installation position ⇒ page 198

29 - Needle bearing

- For 3rd gear

Protected by copyright. Copyright by Volkswagen AG. Volkswagen AG does not guarantee or accept any liability with respect to the correctness of information in this document. Copying for private or commercial purposes, in part or in whole, is not permitted unless authorised by Volkswagen AG.

Downloaded from www.Manualslib.com manuals search engine

30 - Synchromeshed gear for 3rd gear

- ❑ Installation position ⇒ page 198

31 - Tapered roller bearing inner race

- ❑ Pulling off ⇒ page 193
- ❑ Pressing on ⇒ page 194

32 - Retaining ring

- ❑ If tapered roller bearing ⇒ Item 31 (page 187) and output shaft ⇒ Item 6 (page 185) are renewed, redetermine ⇒ page 194

33 - Tapered roller bearing outer race

- ❑ Pulling out ⇒ page 194
- ❑ Pressing in ⇒ page 194

34 - Shim

- ❑ Determining thickness ⇒ page 206

35 - Gearbox housing

2.2 Dismantling and assembling output shaft for 1st through 4th gears

1st/2nd gear synchronisation modified from gearbox date 26 10 9, distinguishing ⇒ page 195

Protected by copyright. Copying for private or commercial purposes, in part or in whole, is not permitted unless authorised by Volkswagen AG. Volkswagen AG does not guarantee or accept any liability with respect to the correctness of information in this document. Copyright by Volkswagen AG.

Downloaded from www.Manualslib.com manuals search engine

Special tools and workshop equipment required

- Thrust plate -VW 401-
- Thrust plate -VW 402-
- Press tool -VW 407-
- Press tool -VW 408A-
- Press tool -VW 412-
- Tube -VW 415A-

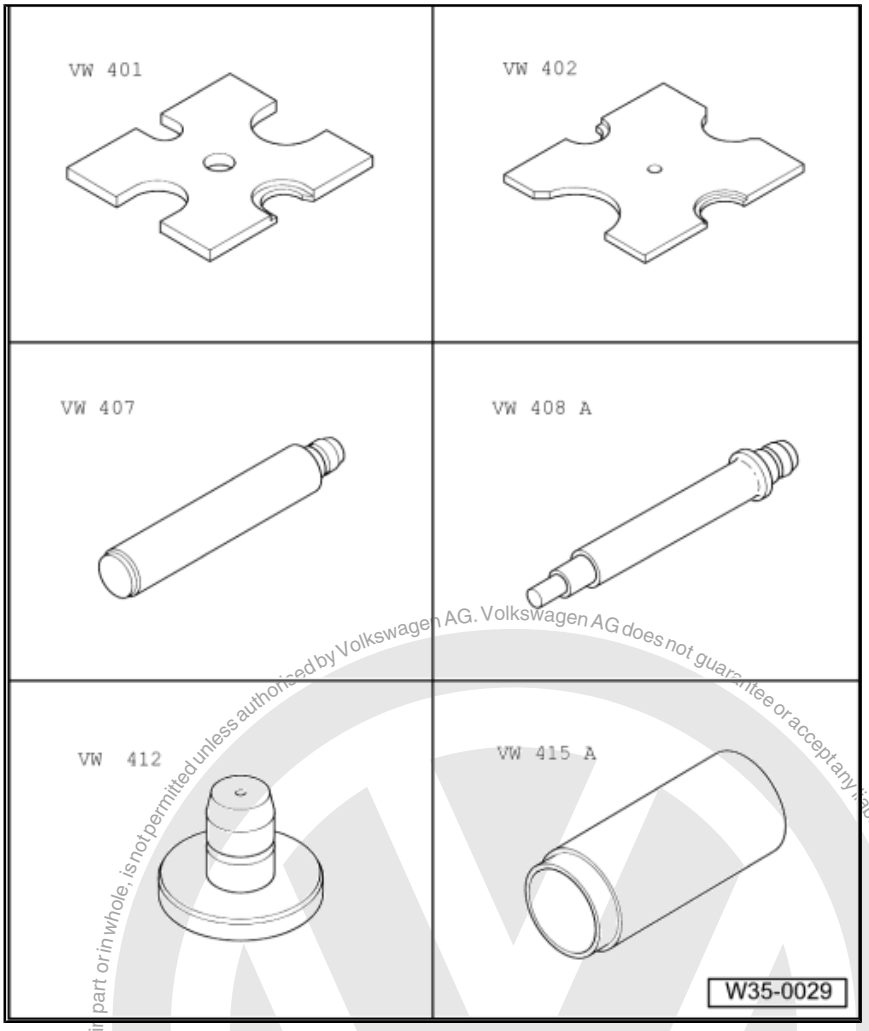

Protected by copyright. Copying for private or commercial purposes, in part or in whole, is not permitted unless authorised by Volkswagen AG. Volkswagen AG does not guarantee or accept any liability with respect to the correctness of information in this document. Copyright by Volkswagen AG.

Downloaded from www.Manualslib.com manuals search engine

- Support plate -VW 309-
- Support clamp -VW 313-
- Gearbox support -VW 353-
- Thrust piece -VW 431-
- Thrust piece -VW 433-
- Thrust piece -VW 454-

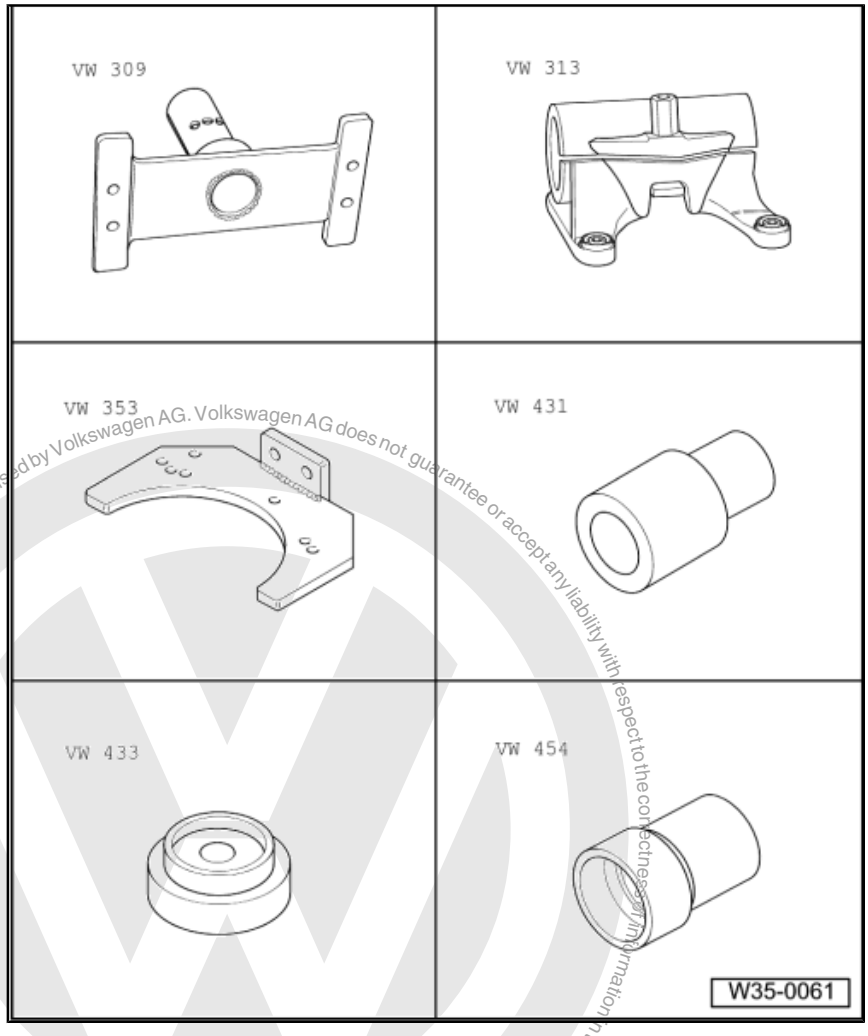

Protected by copyright. Copying for private or commercial purposes, in part or in whole, is not permitted unless authorised by Volkswagen AG. Volkswagen AG does not guarantee or accept any liability with respect to the correctness of information in this document. Copyright by Volkswagen AG.

Downloaded from www.Manualslib.com manuals search engine

- Thrust piece -VW 512-
- Tube -VW 516-
- Tube -VW 519-
- Multipurpose tool -VW 771-
- Support plate -VW 801-
- Thrust plate -40-105-

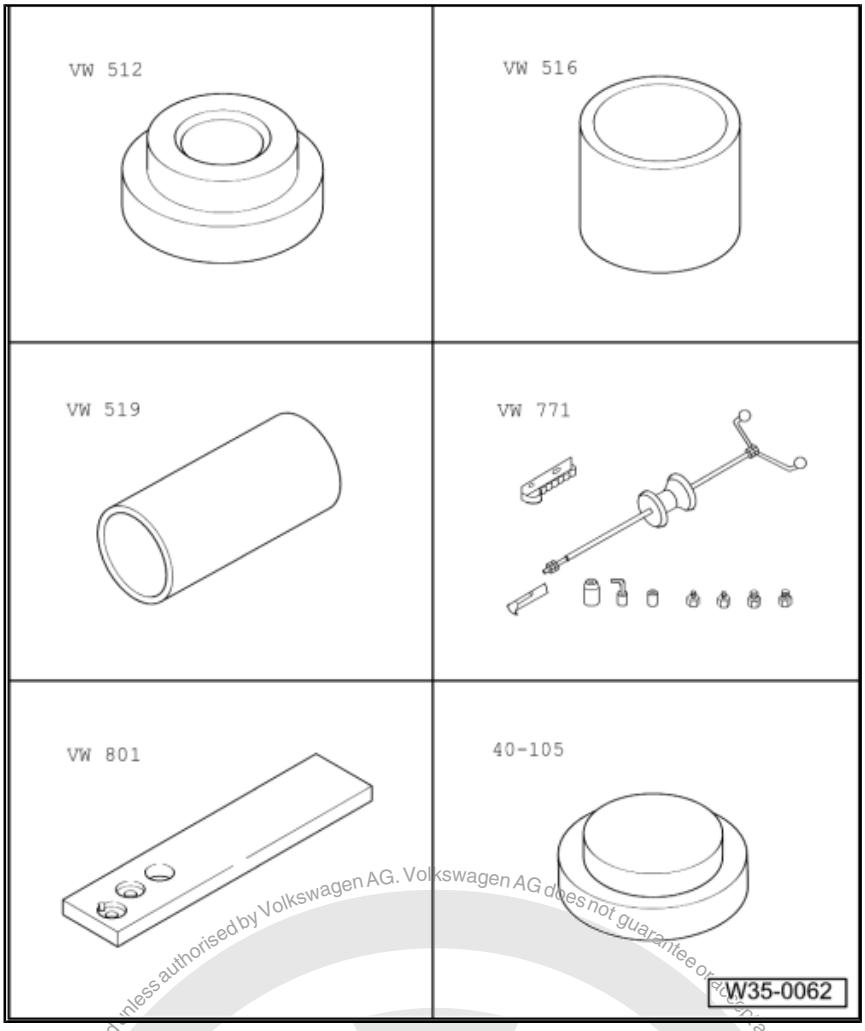

Protected by copyright. Copying for private or commercial purposes, in part or in whole, is not permitted unless authorised by Volkswagen AG. Volkswagen AG does not guarantee or accept any liability with respect to the correctness of information in this document. Copyright by Volkswagen AG.

Downloaded from www.Manualslib.com manuals search engine

- Drift sleeve -40-20-
- Drift sleeve -40-21-
- Thrust piece -2050-
- Supplementary set for engine and gearbox support -VW 540/1 B-
- Tapered roller bearing puller -V.A.G 1582-
- Adapter -V.A.G 1582/7-

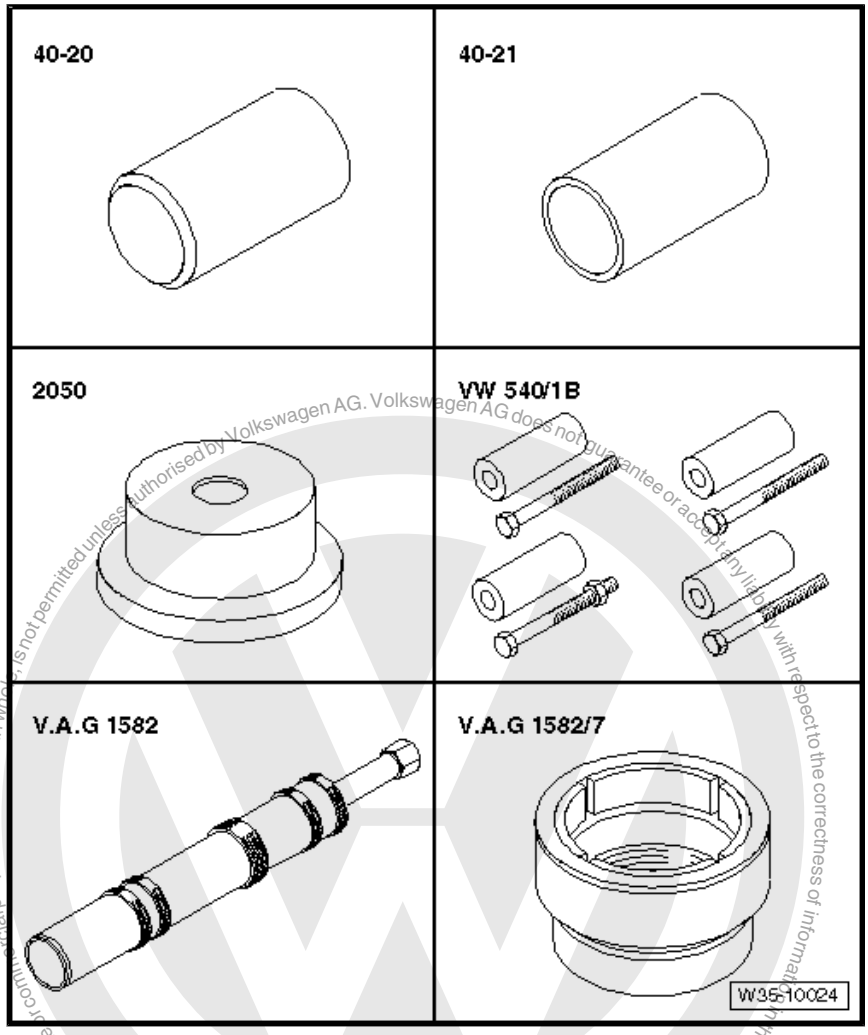

Protected by copyright. Copying for private or commercial purposes, in part or in whole, is not permitted unless authorised by Volkswagen AG. Volkswagen AG does not guarantee or accept any liability with respect to the correctness of information in this document. Copyright by Volkswagen AG.

Downloaded from www.Manualslib.com manuals search engine

- -1- Internal puller - Kukko 21/7-

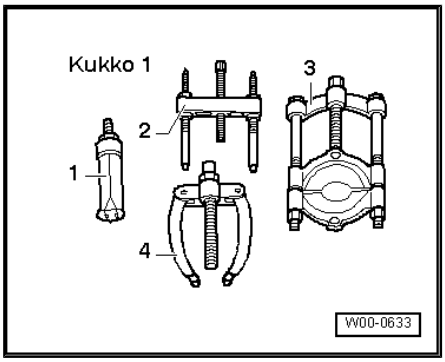

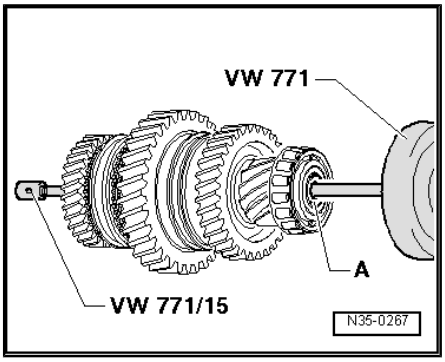

- -1- Internal puller - Kukko 21/8-
- -2- Puller -Kukko 18/2-
- -3- Splitter -Kukko 17/2-
- -4- Counter support - Kukko 22/2-

Pulling dished washer -A- out of output shaft

Pressing dished washer into output shaft

Dimension „a“ = 2 mm

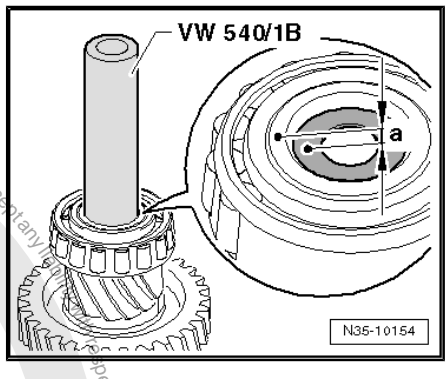

Press off tapered roller bearing inner race on side facing clutch housing

A - Splitter, 22 … 115 mm , e.g. -Kukko 17/2-

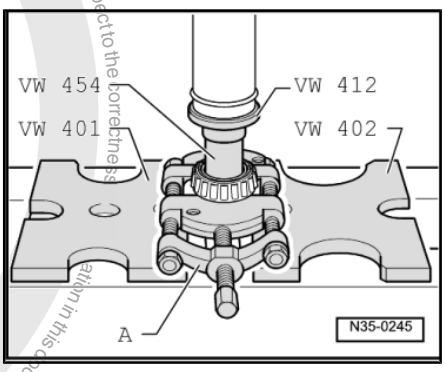

Protected by copyright. Copying for private or commercial purposes, in part or whole, is not permitted unless authorised by Volkswagen AG. Volkswagen AG does not guarantee or accept any liability with respect to the correctness of information in this document. Copyright by Volkswagen AG.

Downloaded from www.Manualslib.com manuals search engine

Press on tapered roller bearing inner race on side facing clutch housing

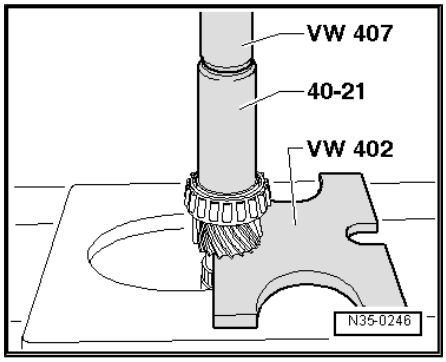

Pulling tapered roller bearing outer race out of clutch housing

A - Counter support , e.g. -Kukko 22/2-

B - Internal puller, 56 … 70 mm , e.g. -Kukko 21/8-

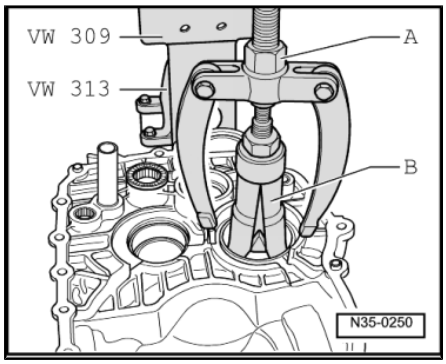

Pressing tapered roller bearing outer race into clutch housing

– Support clutch housing with drift sleeve -40-20- directly below bearing support.

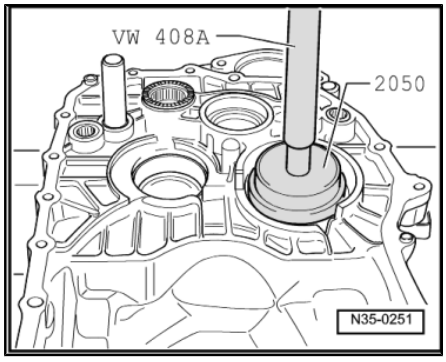

Pull off tapered roller bearing inner race on side facing gearbox housing

Before setting up tapered roller bearing puller :

– Remove retaining ring for tapered roller bearing inner race on side facing clutch housing.

– Insert press tool -VW 431- into output shaft and place thrust plate -40-105- on that.

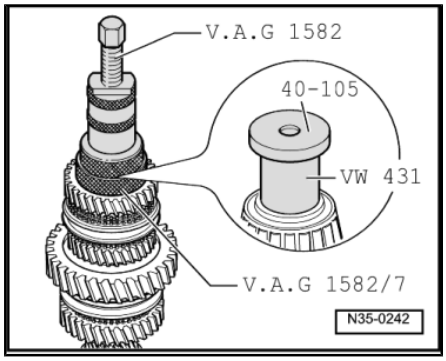

Copyright by Volkswagen AG. Volkswagen AG does not guarantee or accept any liability with respect to the correctness of information in this document. Copying for private or commercial purposes, in part or in whole, is not permitted unless authorised by Volkswagen AG. Protected by copyright.

Downloaded from www.Manualslib.com manuals search engine

Protected by copyright. Copying for private or commercial purposes, in part or in whole, is not permitted unless authorised by Volkswagen AG. Volkswagen AG does not guarantee or accept any liability with respect to the correctness of information in this document. Copyright by Volkswagen AG.

Press on tapered roller bearing inner race on side facing gearbox housing

– Determine and install retaining ring ⇒ page 194 .

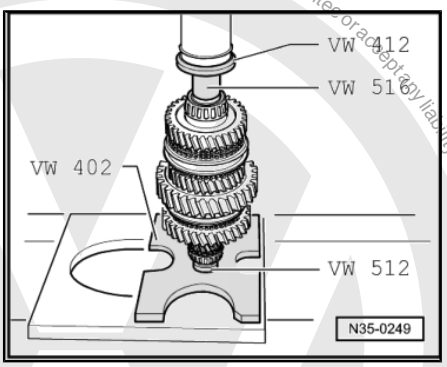

Determining thickness of retaining ring

– Determine thickest retaining ring which will still fit and install it.

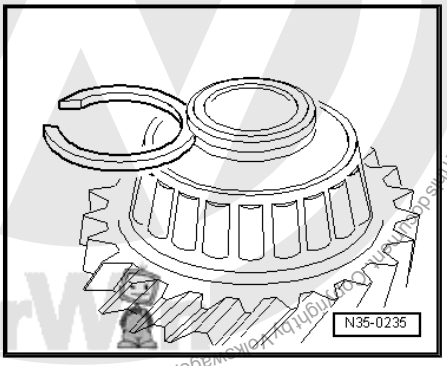

Note

Allocate retaining rings using ⇒ Electronic parts catalogue (ET-KA) .

The following retaining rings are available:

Thickness (mm)			
1.79	1.83	1.86	1.89
1.92	1.95	1.98	

Pulling outer race for tapered roller bearing out of gearbox housing

A - Counter support , e.g. -Kukko 22/2-

B - Internal puller, 46 … 58 mm , e.g. -Kukko 21/7-

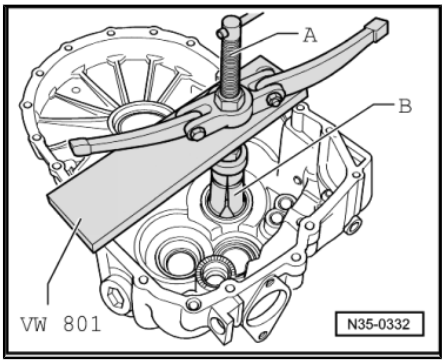

Pressing tapered roller bearing outer race into gearbox housing

– Fit shim under outer race.

– Support gearbox housing with thrust piece -2050- below bearing support.

Dismantle output shaft.

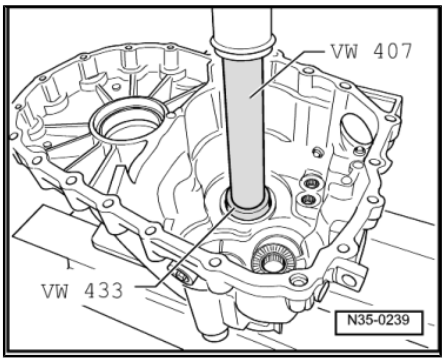

Note

Pull off tapered roller bearing inner race on side facing clutch housing ⇒ page 193 .

Downloaded from www.Manualslib.com manuals search engine

Pulling off synchro-hub and locking collar for 3rd and 4th gears with synchromeshed gear for 4th gear

– First remove retaining ring.

A - Puller , e.g. -Kukko 18/2-

B - Splitter, 22 … 115 mm , e.g. -Kukko 17/2-

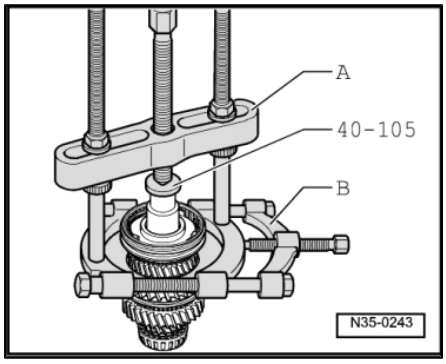

Pressing off locking collar and synchro-hub for 1st and 2nd gears

After removing retaining ring, press off synchromeshed gear for 2nd gear together with locking collar and synchro-hub.

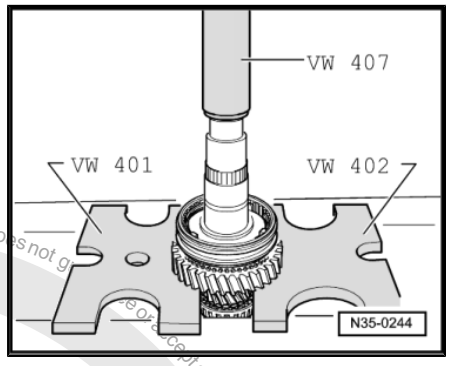

2.2.1 Distinguishing 1st/2nd gear synchronisation

- Up to gearbox date 25 10 9 ⇒ page 195
- From gearbox date 26 10 9 onwards ⇒ page 196

1st/2nd gear synchronisation up to gearbox date 25 10 9

Synchro-ring -C- and inner ring -A- are made of brass. Outer ring -B- is made of steel.
Assembling 1st to 4th gear output shaft up to gearbox date 25 10 9 ⇒ page 196

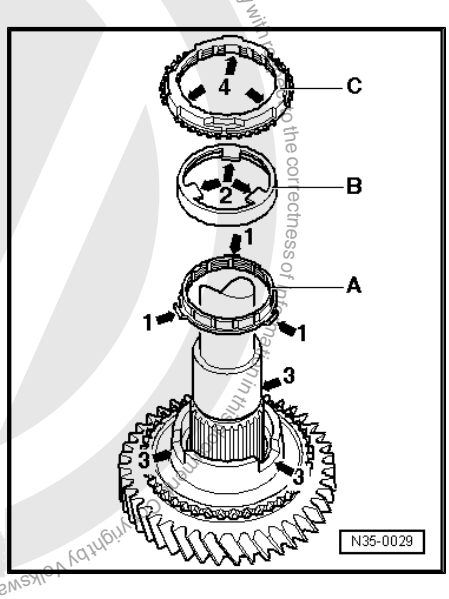

Protected by copyright. Copying for private or commercial purposes, in part or in whole, is not permitted unless authorised by Volkswagen AG. Volkswagen AG does not give any liability with respect to the correctness of information. Copyright by Volkswagen AG.

Downloaded from www.Manualslib.com manuals search engine

1st/2nd gear synchronisation from gearbox date 26 10 9 onwards

Synchro-ring -C-, outer ring -B- and inner ring -A- are made of steel.
Assembling 1st to 4th gear output shaft - from gearbox date 26 10 9 onwards ⇒ page 200

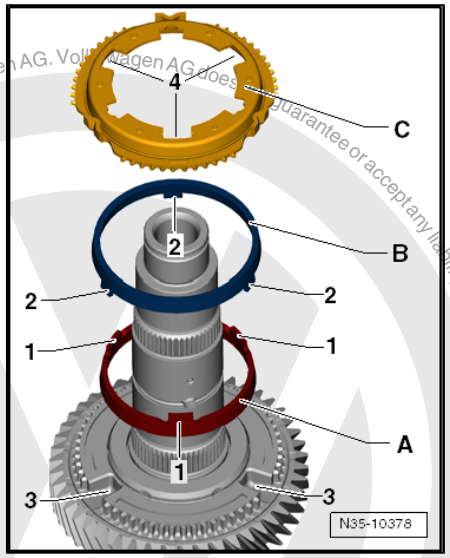

2.2.2 Assembling 1st to 4th gear output shaft up to gearbox date 25 10 9

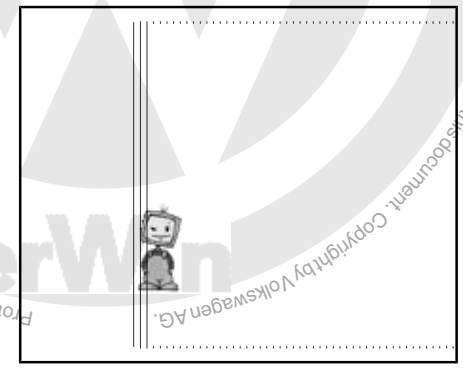

Checking inner ring for 1st, 2nd and 3rd gears for wear

– Check projections on inner ring for scoring.

– Press inner ring onto cone of synchromeshed gear and measure gap -a- using a feeler gauge.

Gap -a-	Installation dimension	Wear limit
1st, 2nd 3rd gears	0.75 … 1.25 mm	0.3 mm

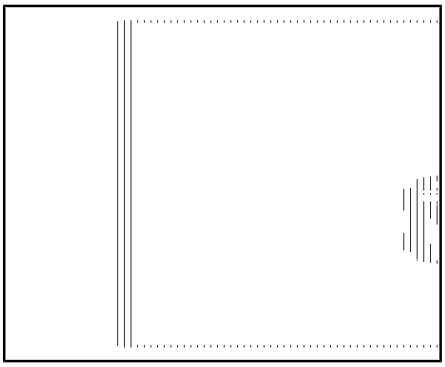

Checking synchro-rings for 1st, 2nd and 3rd gear for wear

– Press synchro-ring, outer ring and inner ring onto cone of synchromeshed gear and measure gap -a- using a feeler gauge.

Gap -a-	Installation dimension	Wear limit
1st, 2nd 3rd gears	1.2 … 1.8 mm	0.5 mm

– Install 2nd gear synchromeshed gear with needle bearing.

Protected by copyright. Copying for private or commercial purposes, in part or in whole, is not permitted unless authorised by Volkswagen AG. Volkswagen AG does not guarantee or accept any liability with respect to the correctness of information in this document. Copyright by Volkswagen AG.

Downloaded from www.Manualslib.com manuals search engine

Installation position of outer ring, inner ring and synchro-ring for 2nd gear

– Check lugs -arrows 1- and -arrows 2- for scoring.

– Renew inner ring, outer ring and synchro-ring in case of scoring.

– Place inner ring -A- on synchromeshed gear for 2nd gear.

Angled lugs -arrows 1- face outer ring -B-.

– Fit outer ring -B-.

Lugs -arrows 2- engage in notches -arrows 3- of synchromeshed gear.

– Fit synchro-ring -C-.

Notches -arrows 4- engage in lugs -arrows 1- of inner ring -A-.

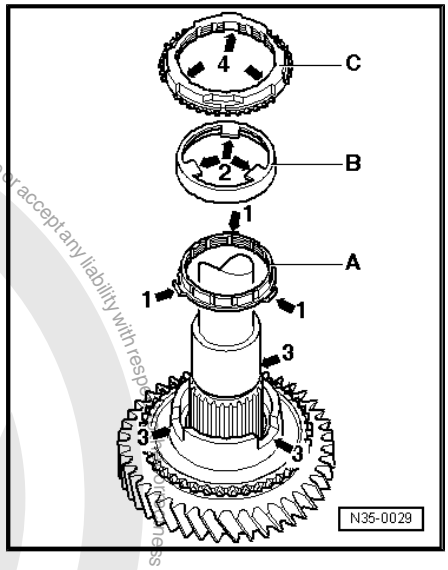

Dismantling and assembling locking collars and synchro-hubs of 1st and 2nd gears as well as 3rd and 4th gears

1 - Spring

2 - Locking piece

3 - Locking collar

4 - Synchro-hub

– Slide locking collar over synchro-hub.

In 3rd and 4th gear, wide collar of synchro-hub and, if present, shoulder on locking collar point in one direction.

Notches for locking pieces in synchro-hub and locking collar must align.

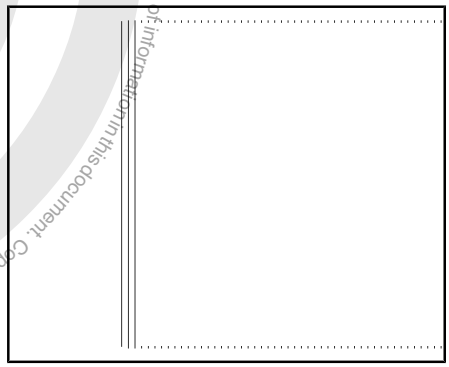

Assembling locking collars and synchro-hubs for 1st and 2nd gears as well as 3rd and 4th gears

Locking collar has been pushed over synchro-hub.

– Insert locking pieces and install springs offset 120°. Angled end of spring must locate in hollow locking piece.

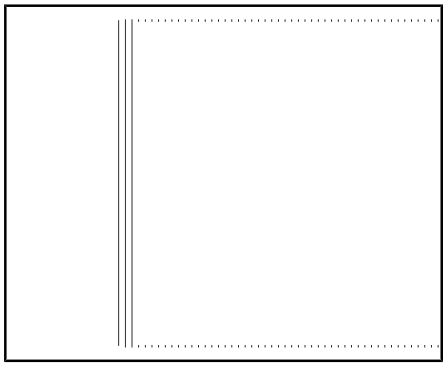

Installation position of locking collar with synchro-hub for 1st and 2nd gears

Identification groove -arrow 1- and narrow collar -arrow 2- of synchro-hub face 1st gear.

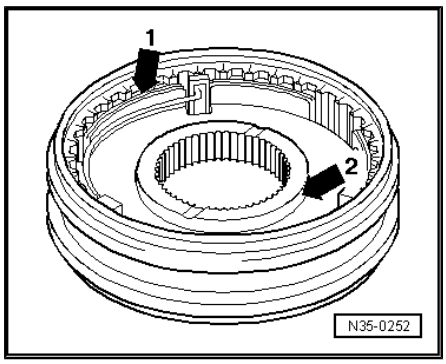

Downloaded from www.Manualslib.com manuals search engine

Pressing on locking collar and synchro-hub for 1st and 2nd gears

Turn synchro-ring so that grooves align with locking pieces.

– Install retaining ring.

Insert synchro-ring for 1st gear.

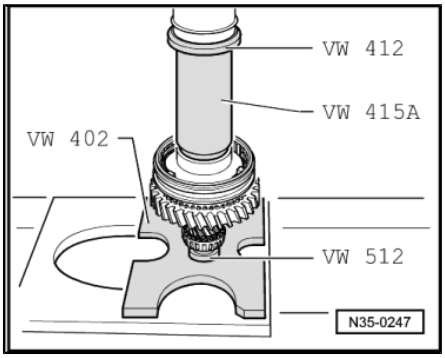

Installation position of 1st gear outer ring

Lugs -arrows- face synchro-hub and locking collar -A-.

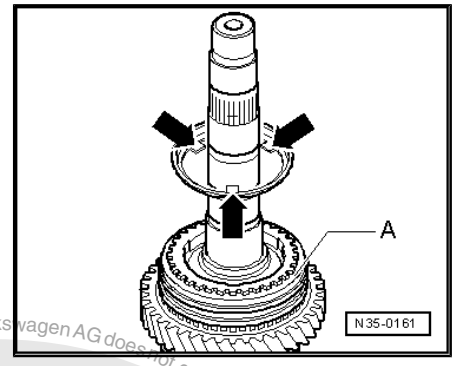

Installation position of synchro-ring -A- (1st gear inner ring)

Lugs -arrows 1- locate in notches -arrows 2- of synchro-ring -B-.

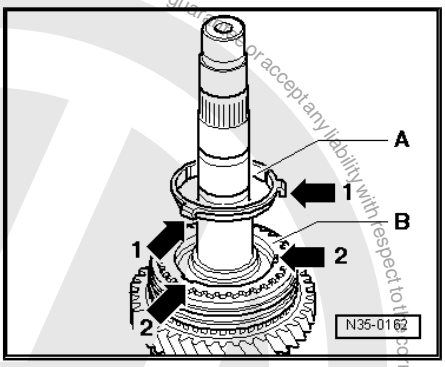

Installing synchromeshed gear for 1st gear with needle bearing

Higher shoulder -A- faces 2nd gear -B-. Notches in shoulder -arrows- engage in lugs of outer ring ⇒ page 198 .

– Install thrust washers for 1st and 4th gears ⇒ Item 19 (page 186) and ⇒ Item 20 (page 186) .

– Install 4th gear synchromeshed gear with needle bearing.

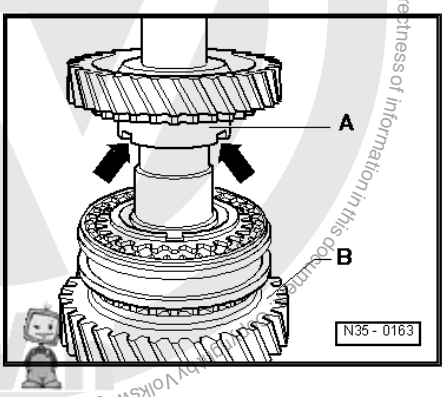

Protected by copyright. Copying for private or commercial purposes, in part or in whole, is not permitted unless authorised by Volkswagen AG. Volkswagen AG does not guarantee or accept any liability with respect to the correctness of information in this document. Copyright by Volkswagen AG.

Downloaded from www.Manualslib.com manuals search engine

Checking synchro-ring for 4th gear for wear

– Press synchro-ring onto cone of synchromeshed gear and measure gap -a- using feeler gauge.

Gap -a-	Installation dimen-sion	Wear limit
4th gear	1.0 … 1.7 mm	0.5 mm

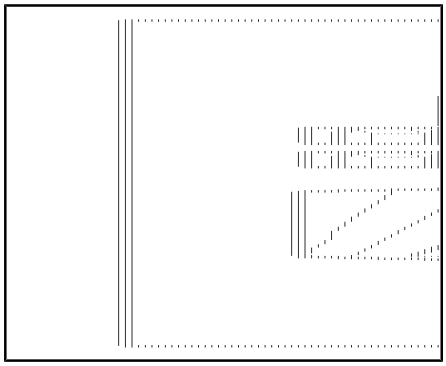

Installation position of locking collar with synchro-hub for 3rd and 4th gears

Wider shoulder of synchro-hub -arrow- faces 3rd gear.

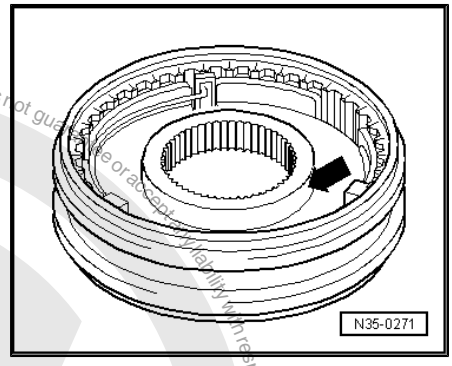

Pressing on synchro-hub with locking collar for 3rd and 4th gears

– Turn synchro-ring so that grooves align with locking pieces.
– Install retaining ring.
– Place 3rd gear synchro-ring on locking collar with synchro-hub for 3rd and 4th gears.

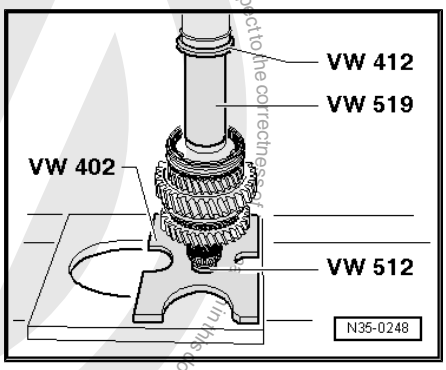

Installation position of 3rd gear outer ring

Lugs -arrows- face synchro-hub and locking collar -A-.

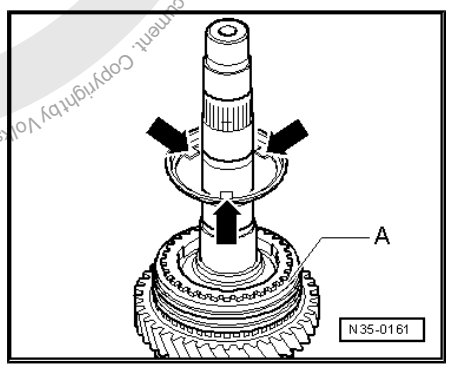

Protected by copyright. Copying for private or commercial purposes, partially or in whole, is not permitted unless authorised by Volkswagen AG. Volkswagen AG does not guarantee or accept any liability with respect to the correctness of information in this document. Copyright by Volkswagen AG.

Downloaded from www.Manualslib.com manuals search engine

Installation position of synchro-ring -A- (3rd gear inner ring)

Lugs -arrows 1- locate in notches -arrows 2- of synchro-ring -B-.

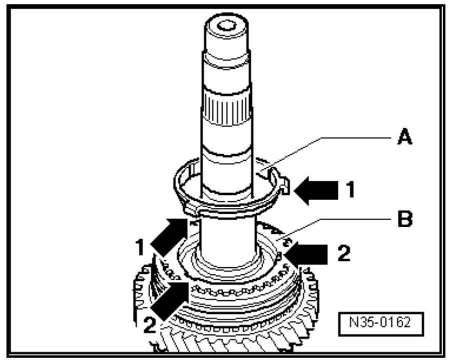

Installation position of 3rd gear synchromeshed gear

Higher shoulder -A- faces 4th gear -B-. Notches in shoulder -arrows- engage in lugs of outer ring ⇒ page 198 .

– Install 3rd gear synchromeshed gear with needle bearing.

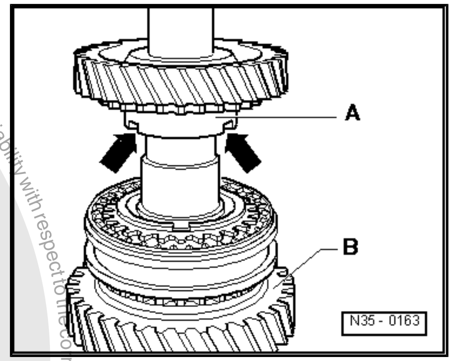

Note

- *Press on tapered roller bearing inner race ⇒ page 194 .*
- *Determine retaining ring for tapered roller bearing inner race ⇒ page 194 .*

2.2.3 Assembling 1st to 4th gear output shaft - from gearbox date 26 10 9 onwards

Check inner friction surface of 1st gear outer ring and 2nd gear outer ring for wear

– Place inner ring -1- on cone of synchromeshed gear.

– Press outer ring -2- on cone of inner ring. Measure gap size -a- at 3 points offset by 120° using feeler gauge.

– Make a note of average value.

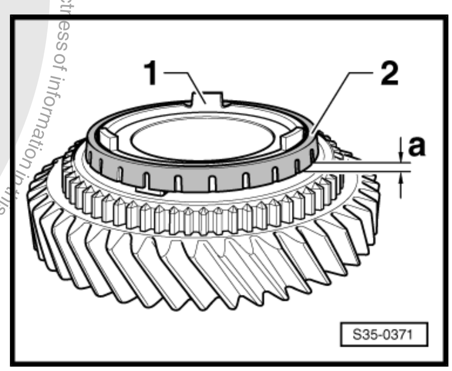

Gap -a-	Installation dimension	Wear limit
1st and 2nd gears	1.00 … 1.80 mm	0.3 mm

Protected by copyright. Copying for private or commercial purposes, in part or in whole, is not permitted unless authorised by Volkswagen AG. Volkswagen AG does not guarantee or accept any liability with respect to the correctness of information in this document. Copyright by Volkswagen AG.

Downloaded from www.Manualslib.com manuals search engine

Check outer friction surface of 1st gear outer ring and 2nd gear outer ring for wear

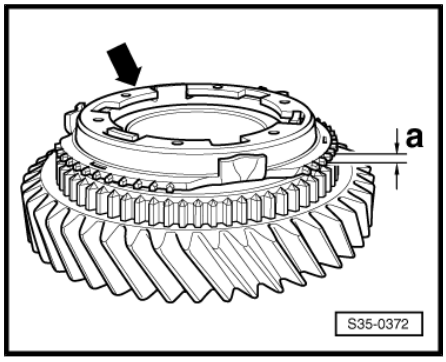

– Check inner surface of synchro-ring -arrow- for scoring and radial contact scoring, renew if necessary.

– Place inner ring, outer ring and synchro-ring on cone of inner ring.

– Press on synchro-ring with outer ring whilst turning at same time in order to seat them.

– Measure gap size -a- at 3 points offset by 120° using feeler gauge.

– Make a note of average value.

Gap -a-	Installation dimension	Wear limit
1st and 2nd gears	1.00 … 1.80 mm	0.8 mm

– Install 2nd gear synchromeshed gear with needle bearing.

Installation of outer ring, inner ring and synchro-ring for 2nd gear

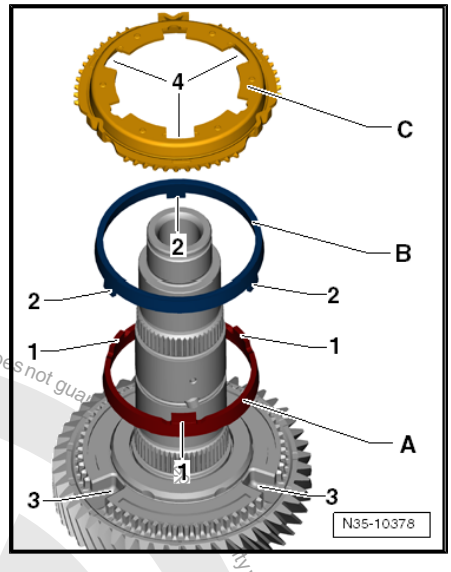

– Place inner ring -A- on synchromeshed gear.

Lugs -1- point away from synchromeshed gear.

– Fit outer ring -B-.

Lugs -2- engage in notches -3- of synchromeshed gear.

– Fit synchro-ring -C-.

Larger notches -4- engage in lugs -1- of inner ring -A-.

Dismantling and assembling locking collars and synchro-hubs of 1st and 2nd gears as well as 3rd and 4th gears

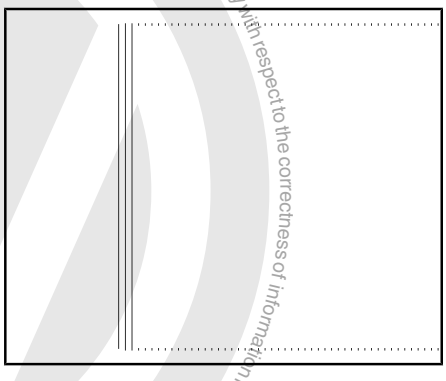

1 - Spring

2 - Locking piece

3 - Locking collar

4 - Synchro-hub

– Slide locking collar over synchro-hub.

In 3rd and 4th gear, wide collar of synchro-hub and, if present, shoulder on locking collar point in one direction.

Notches for locking pieces in synchro-hub and locking collar must align.

Protected by copyright. Copying for private or commercial purposes, in part or in whole, is not permitted unless authorised by Volkswagen AG. Volkswagen AG does not guarantee or accept any liability with respect to the correctness of information in this document. Copyright by Volkswagen AG.

Downloaded from www.Manualslib.com manuals search engine

Assembling locking collars and synchro-hubs for 1st and 2nd gears as well as 3rd and 4th gears

Locking collar has been pushed over synchro-hub.

– Insert locking pieces and install springs offset 120°. Angled end of spring must locate in hollow locking piece.

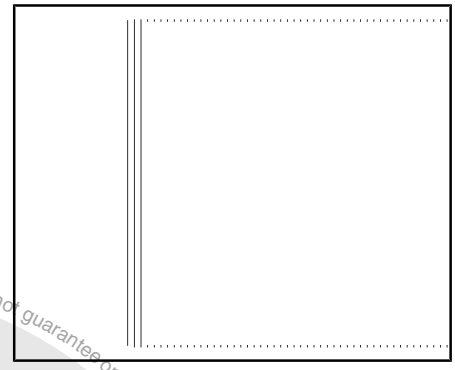

Installation position of locking collar with synchro-hub for 1st and 2nd gears

Identification groove -arrow 1- and narrow collar -arrow 2- of synchro-hub face 1st gear.

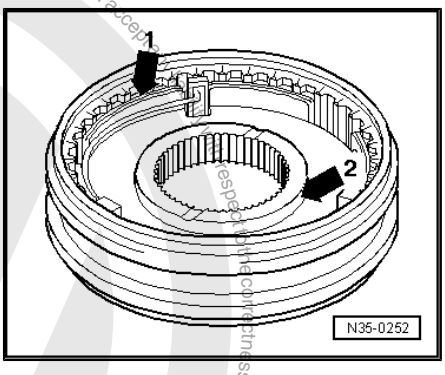

Pressing on locking collar and synchro-hub for 1st and 2nd gears

Pins -A- of synchro-ring engage in notches -B- of synchro-hub.

– Install retaining ring.

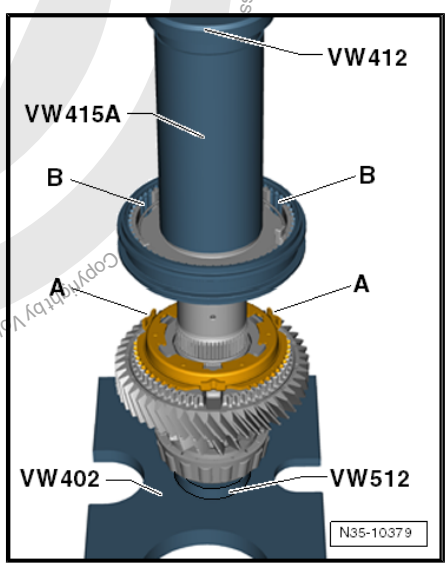

Protected by copyright. Copying for private or commercial purposes, in part or in whole, is not permitted unless authorised by Volkswagen AG. Volkswagen AG does not guarantee or accept any liability with respect to the correctness of information in this document. Copyright by Volkswagen AG.

Downloaded from www.Manualslib.com manuals search engine

Installation of synchro-ring outer ring and 1st gear inner ring

– Insert synchro-ring -A- into synchro-hub.

Lugs -1- engage in notches -2- of synchro-hub.

– Insert outer ring -B- into synchro-ring.

Lugs -3- point away from synchro-ring.

– Insert inner ring -C- into outer ring.

Lugs -4- engage in larger notches -5- of synchro-ring -A-.

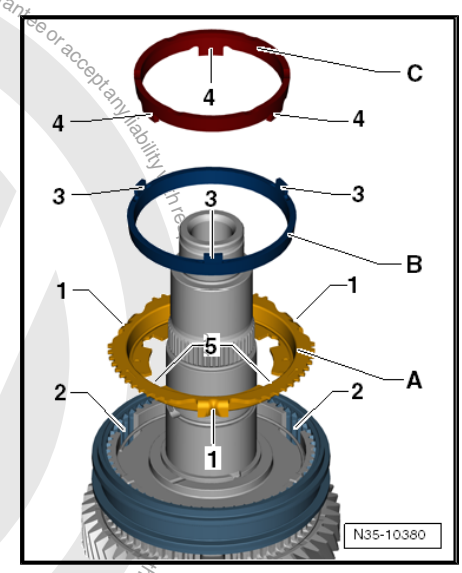

Installing synchromeshed gear for 1st gear with needle bearing

- Synchro-ring -1- is located with lugs -arrow A- in notches of synchro-hub -2-.

Pins -arrows B- of outer ring engage in notches -arrows C- of synchromeshed gear -3-.

– Install thrust washers for 1st and 4th gears ⇒ Item 19 (page 186) and ⇒ Item 20 (page 186) .

– Install 4th gear synchromeshed gear with needle bearing.

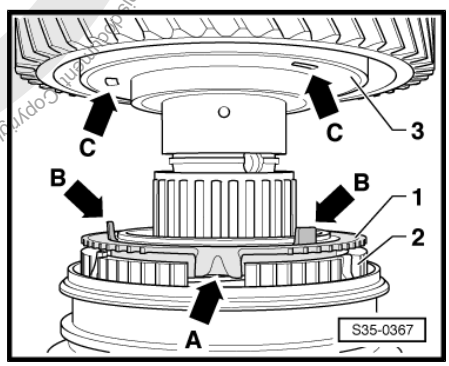

Checking synchro-ring for 4th gear for wear

– Press synchro-ring onto cone of synchromeshed gear and measure gap -a- using feeler gauge.

Gap -a-	Installation dimension	Wear limit
4th gear	1.0 … 1.7 mm	0.5 mm

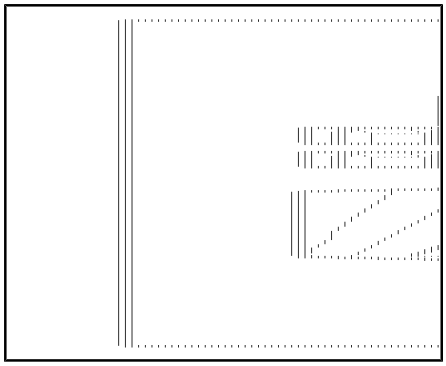

Installation position of locking collar with synchro-hub for 3rd and 4th gears

Wider shoulder of synchro-hub -arrow- faces 3rd gear.

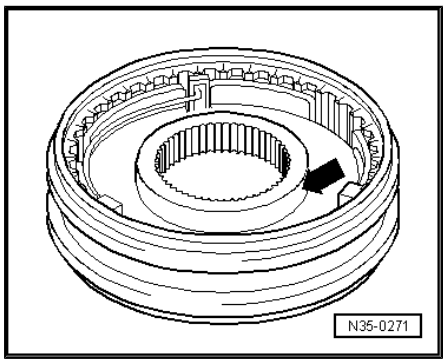

Downloaded from www.Manualslib.com manuals search engine

Protected by copyright. Copying for private or commercial purposes, in part or in whole, is not permitted unless authorised by Volkswagen AG. Volkswagen AG does not guarantee or accept any liability with respect to the correctness of information in this document. Copyright by Volkswagen AG.

Pressing on synchro-hub with locking collar for 3rd and 4th gears

– Turn synchro-ring so that grooves align with locking pieces.
– Install retaining ring.

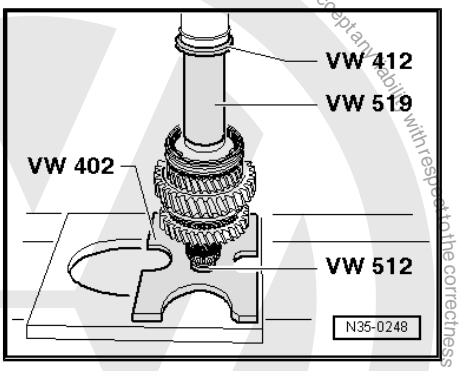

Checking inner ring for 3rd gear for wear

– Press inner ring onto cone of synchromeshed gear and measure gap -a- using a feeler gauge.

Gap -a-	Installation dimension	Wear limit
3rd gear	0.75 … 1.25 mm	0.3 mm

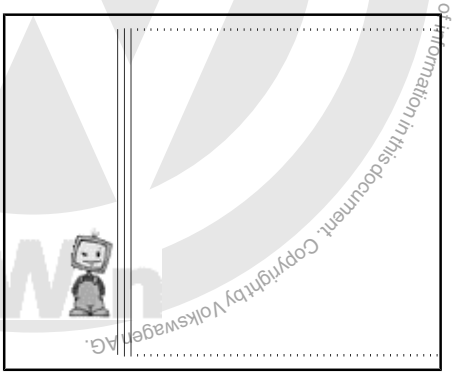

Checking synchro-ring for 3rd gear for wear

– Press synchro-ring, outer ring and inner ring onto cone of synchromeshed gear and measure gap -a- using a feeler gauge.

Gap -a-	Installation dimension	Wear limit
3rd gear	1.2 … 1.8 mm	0.5 mm

– Place 3rd gear synchro-ring on locking collar with synchro-hub for 3rd and 4th gears.

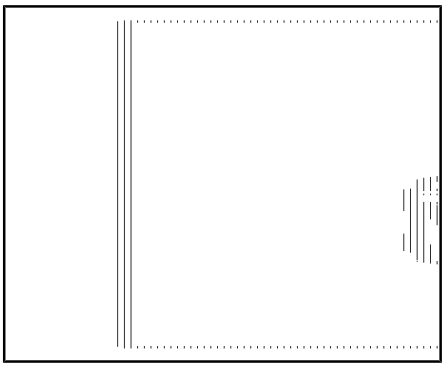

Installation position of 3rd gear outer ring

Lugs -arrows- face synchro-hub and locking collar -A-.

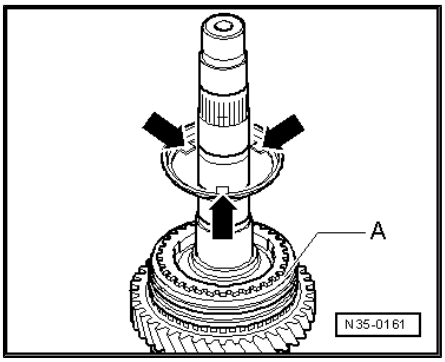

Downloaded from www.Manualslib.com manuals search engine

Installation position of synchro-ring -A- (3rd gear inner ring)

Lugs -arrows 1- locate in notches -arrows 2- of synchro-ring -B-.

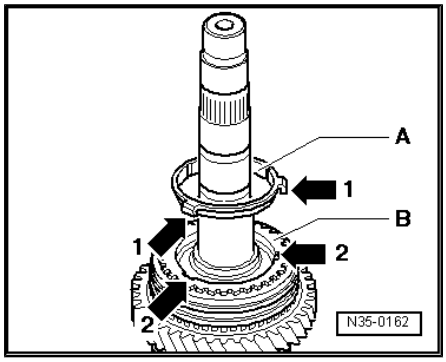

Installation position of 3rd gear synchromeshed gear

Higher shoulder -A- faces 4th gear -B-. Notches in shoulder -arrows- engage in lugs of outer ring ⇒ page 198 .

– Install 3rd gear synchromeshed gear with needle bearing.

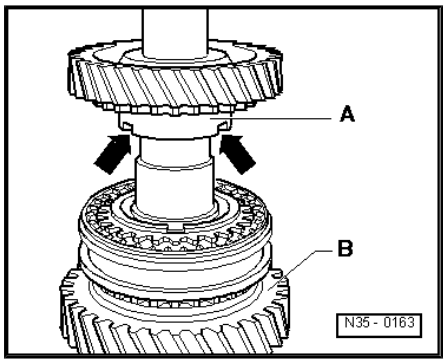

Note

- *Press on tapered roller bearing inner race* *⇒ page 194* *.*
- *Determine retaining ring for tapered roller bearing inner race* *⇒ page 194* *.*

Protected by copyright. Copying for private or commercial purposes, in part or in whole, is not permitted unless authorised by Volkswagen AG. Volkswagen AG does not guarantee or accept any liability with respect to the correctness of information in this document. Copyright by Volkswagen AG.

Downloaded from www.Manualslib.com manuals search engine

Protected by copyright. Copying for private or commercial purposes, in part or whole, is not permitted unless authorised by Volkswagen AG. Volkswagen AG does not guarantee or accept any liability with respect to the correctness of information in this document. Copyright by Volkswagen AG.

2.3 Adjusting output shaft for 1st through 4th gears

Special tools and workshop equipment required

- Gearbox support -VW 353-
- Universal dial gauge bracket -VW 387-
- Press tool -VW 407-
- Thrust piece -VW 433-
- Assembly tool -VW 792-
- Support plate -VW 801-

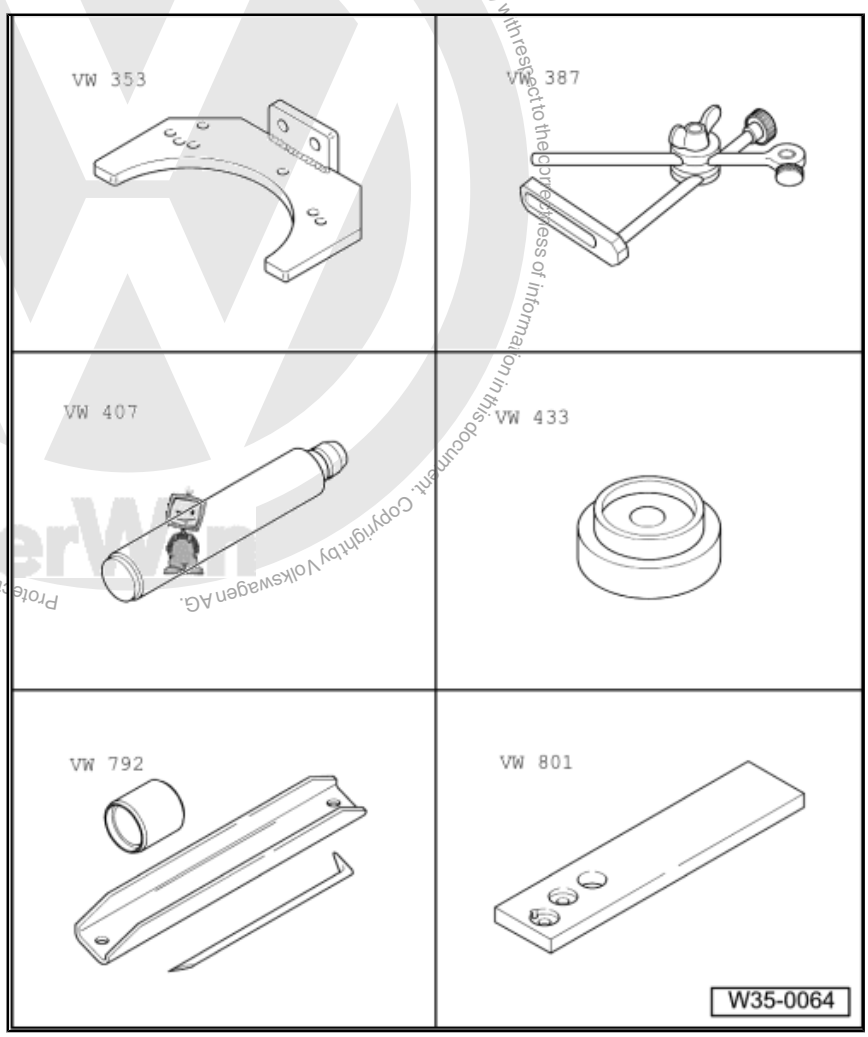

Downloaded from www.Manualslib.com manuals search engine

- Support plate -VW 309-
- Thrust piece -2050-
- Torque wrench -V.A.G 1331-
- Internal puller -1 - Kukko 21/7-
- Counter support -4 - Kukko 22/2-

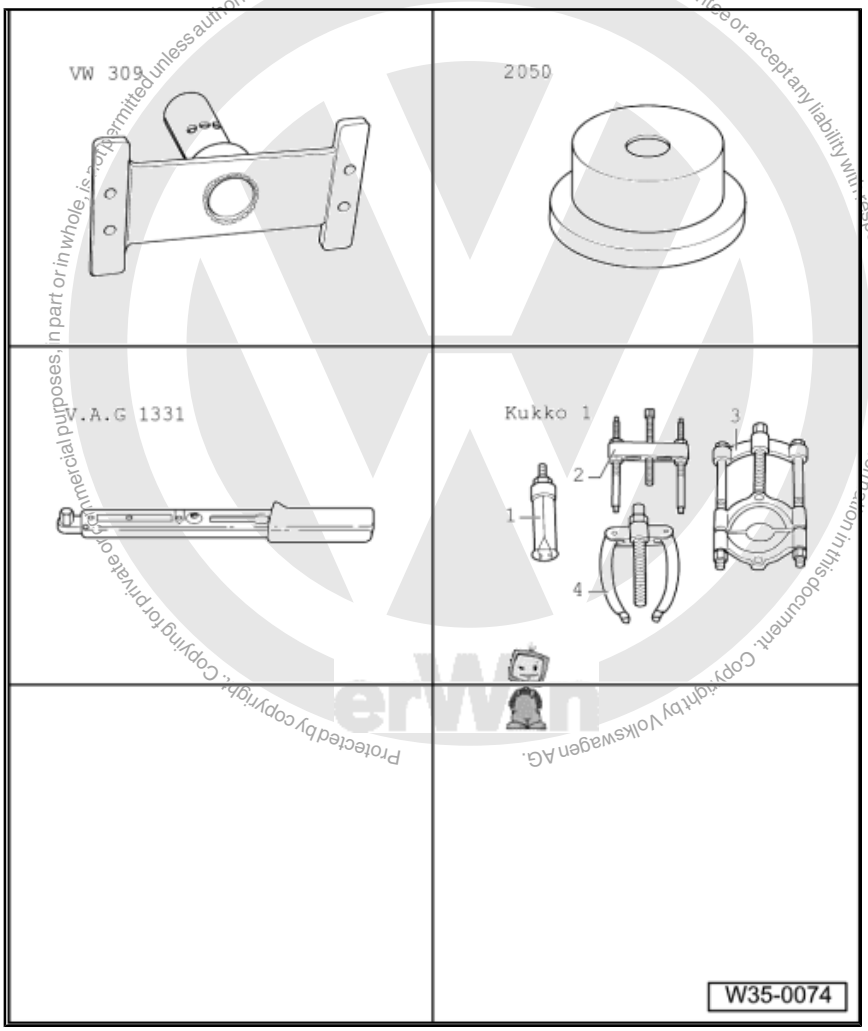

(Determining shim for output shaft)

It is necessary to readjust the output shaft when the following components are renewed:

- Gearbox housing
- Clutch housing
- Output shaft for 1st to 4th gear or
- Tapered roller bearing for output shaft

Adjustment overview ⇒ page 232

Prerequisites:

- Sealing surfaces of clutch and gearbox housings must be free of sealant.
- When taking measurements, install only the output shaft to be measured.

Downloaded from www.Manualslib.com manuals search engine

Protected by copyright. Copying for private or commercial purposes, in part or in whole, is not permitted unless authorised by Volkswagen AG. Volkswagen AG does not guarantee or accept any liability with respect to the correctness of information.

– Press tapered roller bearing outer race with 1.70 mm thick shim into gearbox housing to stop. In the process, support gearbox housing using thrust piece -2050- directly below bearing support.

– Set complete output shaft for 1st through 4th gears in clutch housing.

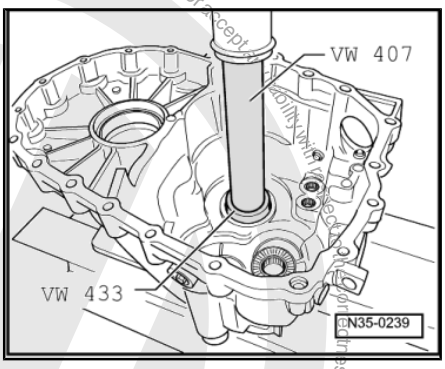

– Set gearbox housing in position and tighten bolts -A- as well as -B- alternately and diagonally to specified torque.

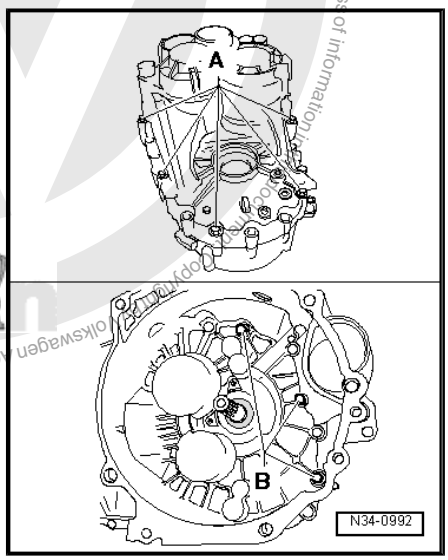

– Set up measuring tools and secure to clutch housing using bolt -arrow-.

– Set dial gauge (3 mm measuring range) to „0“ with 1 mm preload.

– Loosen clutch housing/gearbox housing securing bolts diagonally until the bolts release the gearbox housing or output shaft.

– Read and note value on dial gauge (example: 0.14 mm).

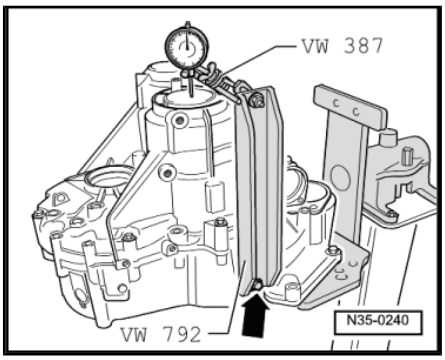

Note

- *If no value is indicated when clutch housing/gearbox housing securing bolts are loosened:*
- *Install 1.95 mm shim or, if necessary, 2.20 mm shim for measurement.*
- *Allocate shims using ⇒ Electronic parts catalogue (ETKA) .*

2.3.1 Determining thickness of shim

Specified bearing preload is obtained as follows:

Subtracting measured value (0.14 mm) from inserted shim (1.70 mm).

Add a constant value for preload (0.20 mm).

Downloaded from www.Manualslib.com manuals search engine

Volkswagen AG. Volkswagen AG does not guarantee or accept any liability with respect to this document. Copyright by Volkswagen AG. Protected by copyright. Copying for private or commercial purposes, in part or in whole, is not permitted unless authorised by Volkswagen AG.

Example:

Installed shim	1.70 mm
- Measured value	0.14 mm
+ Preload (constant)	0.20 mm
Shim thickness	1.76 mm

– Determine thickness of shim from table ⇒ page 209 .

– Remove gearbox housing and pull tapered roller bearing outer race from gearbox housing.

A - Counter support , e.g. -Kukko 22/2-

B - Internal puller, 46 … 58 mm , e.g. -Kukko 21/7-

– Remove inserted shim (1.70 mm thick) from gearbox housing.

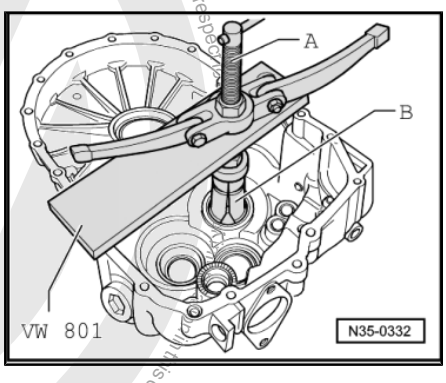

2.3.2 Table of shims

	Thickness (mm)	
1.45	1.75	2.05
1.50	1.80	2.10
1.55	1.85	2.15
1.60	1.90	2.20
1.65	1.95	2.25
1.70	2.00	

The various thicknesses make it possible to achieve the exact shim thickness required.

– Determine part number of shim according to ⇒ Electronic parts catalogue „ETKA“ .

– Press in tapered roller bearing outer race together with correct shim (in example 1.75 mm). In the process, support gearbox housing using thrust piece -2050- directly below bearing support.

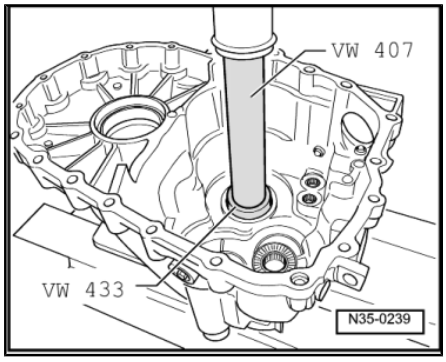

2.3.3 Carrying out check measurement

- Determined shim installed.

Downloaded from www.Manualslib.com manuals search engine

– Set up measuring tools and secure to clutch housing using bolt -arrow-.
– Set dial gauge (3 mm measuring range) to „0“ with 1 mm pre-load.
– Loosen clutch housing/gearbox housing securing bolts diagonally until the bolts release the gearbox housing or output shaft.
– If correct shim has been selected, dial gauge will indicate a value between 0.15 mm to 0.25 mm.

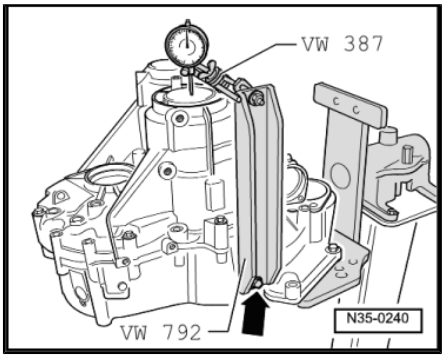

Protected by copyright. Copying for private or commercial purposes, in part or in whole, is not permitted unless authorised by Volkswagen AG. Volkswagen AG does not guarantee or accept any liability with respect to the correctness of information in this document. Copyright by Volkswagen AG.

Downloaded from www.Manualslib.com manuals search engine

3 Output shaft for 5th, 6th and reverse gears

3.1 Dismantling and assembling output shaft for 5th, 6th and reverse gears

Special tools and workshop equipment required

- Thrust plate -VW 401-
- Thrust plate -VW 402-
- Press tool -VW 407-
- Press tool -VW 408 A-
- Press tool -VW 412-
- Tube -VW 415 A-

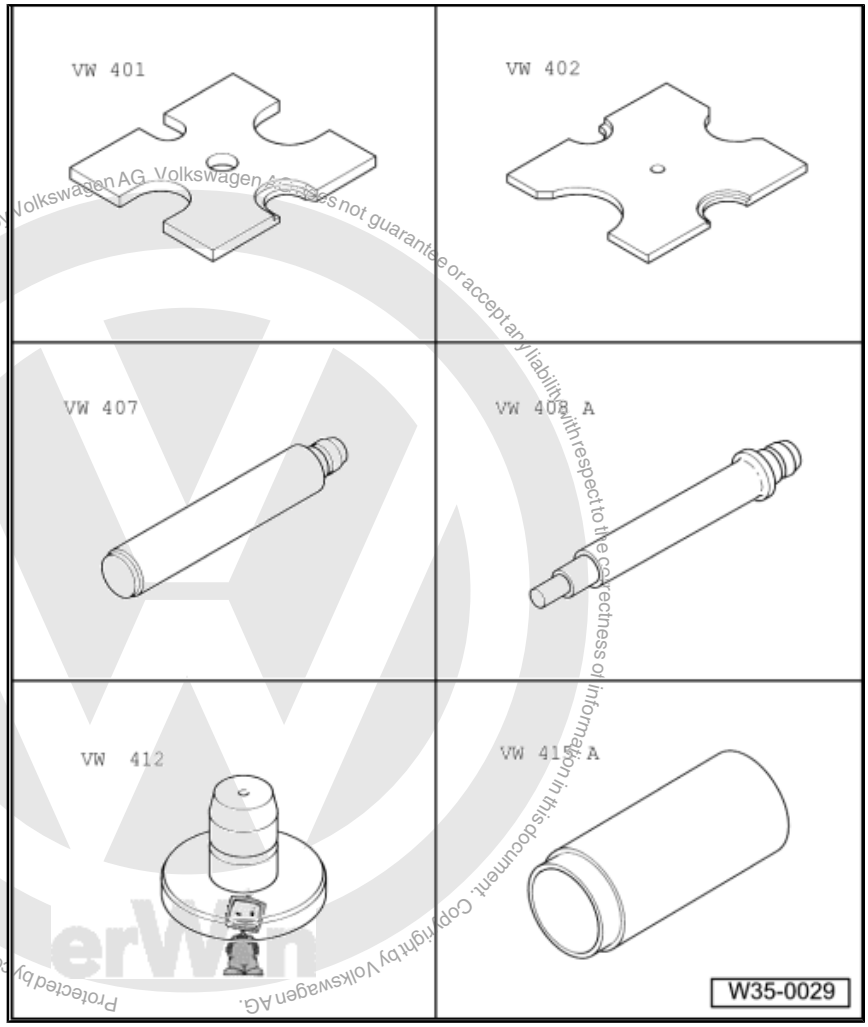

Protected by copyright. Copying for private or commercial purposes, in part or in whole, is not permitted unless authorised by Volkswagen AG. Volkswagen AG does not guarantee or accept any liability with respect to the correctness of information in this document. Copyright by Volkswagen AG.

Downloaded from www.Manualslib.com manuals search engine

- Support plate -VW 309-
- Gearbox support -VW 353-
- Thrust piece -VW 433-
- Thrust piece -VW 454-
- Support rail -VW 457-
- Support plate -VW 801-

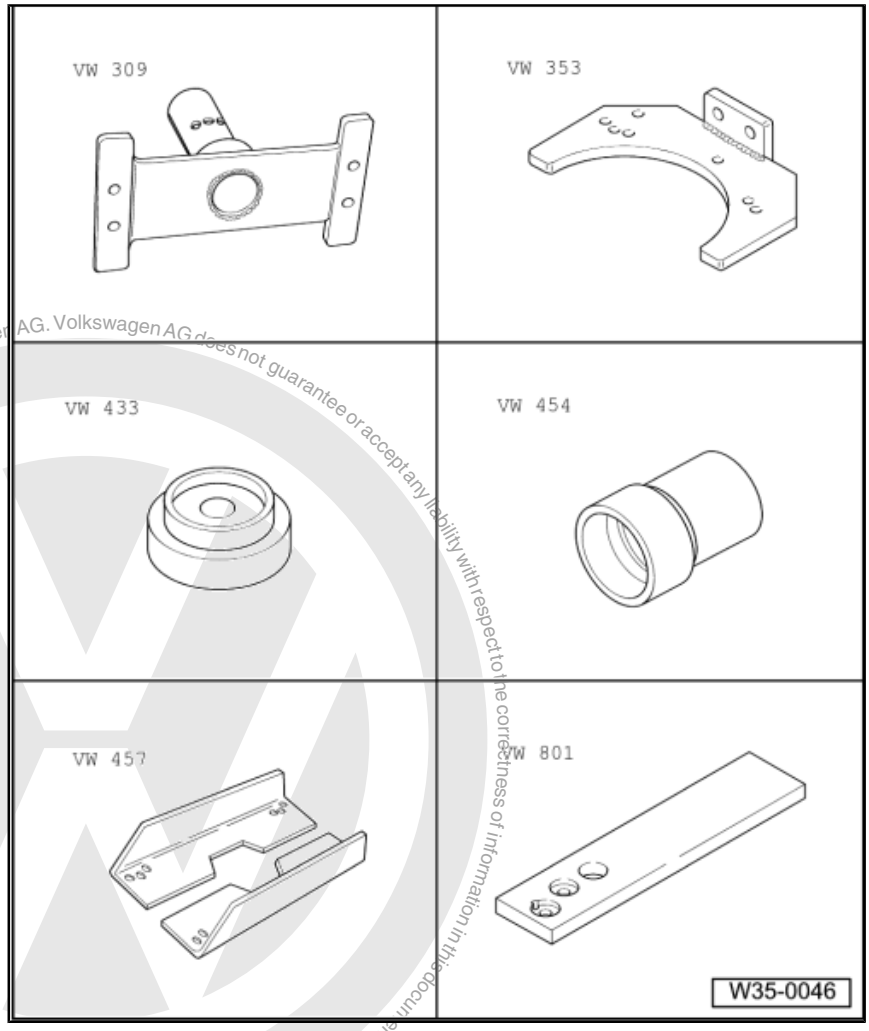

Protected by copyright. Copying for private or commercial purposes, in part or in whole, is not permitted unless authorised by Volkswagen AG. Volkswagen AG does not guarantee or accept any liability with respect to the correctness of information in this document. Copyright by Volkswagen AG.

Downloaded from www.Manualslib.com manuals search engine

- Thrust piece -VW 431-
- Installing sleeve -VW 455-
- Thrust pad -VW 510-
- Tube -VW 516-
- Tube -VW 519-
- Thrust plate -30 - 11-

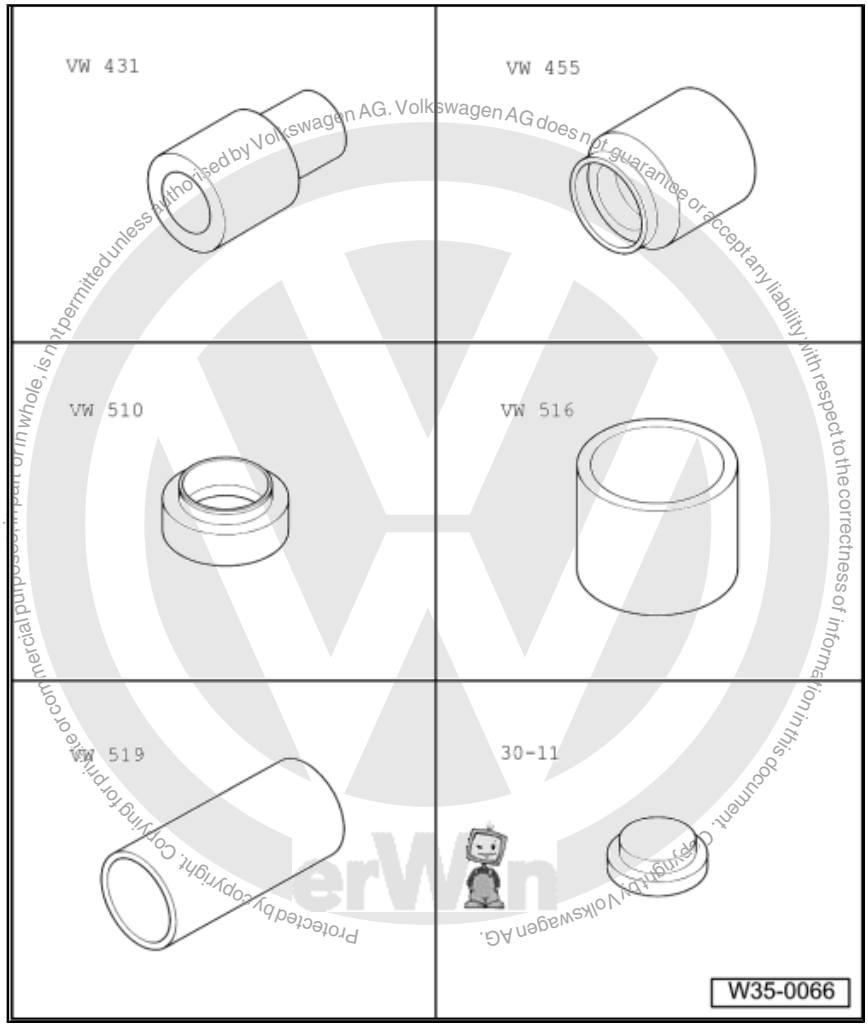

Protected by copyright. Copying for private or commercial purposes, in part or in whole, is not permitted unless authorised by Volkswagen AG. Volkswagen AG does not guarantee or accept any liability with respect to the correctness of information in this document. Copyright by Volkswagen AG.

Downloaded from www.Manualslib.com manuals search engine

- Thrust plate -40 - 105-
- Drift sleeve -40 - 20-
- Thrust piece -2050-
- Tube -3296-
- Tapered roller bearing puller -V.A.G 1582-
- Adapter -V.A.G 1582/4-

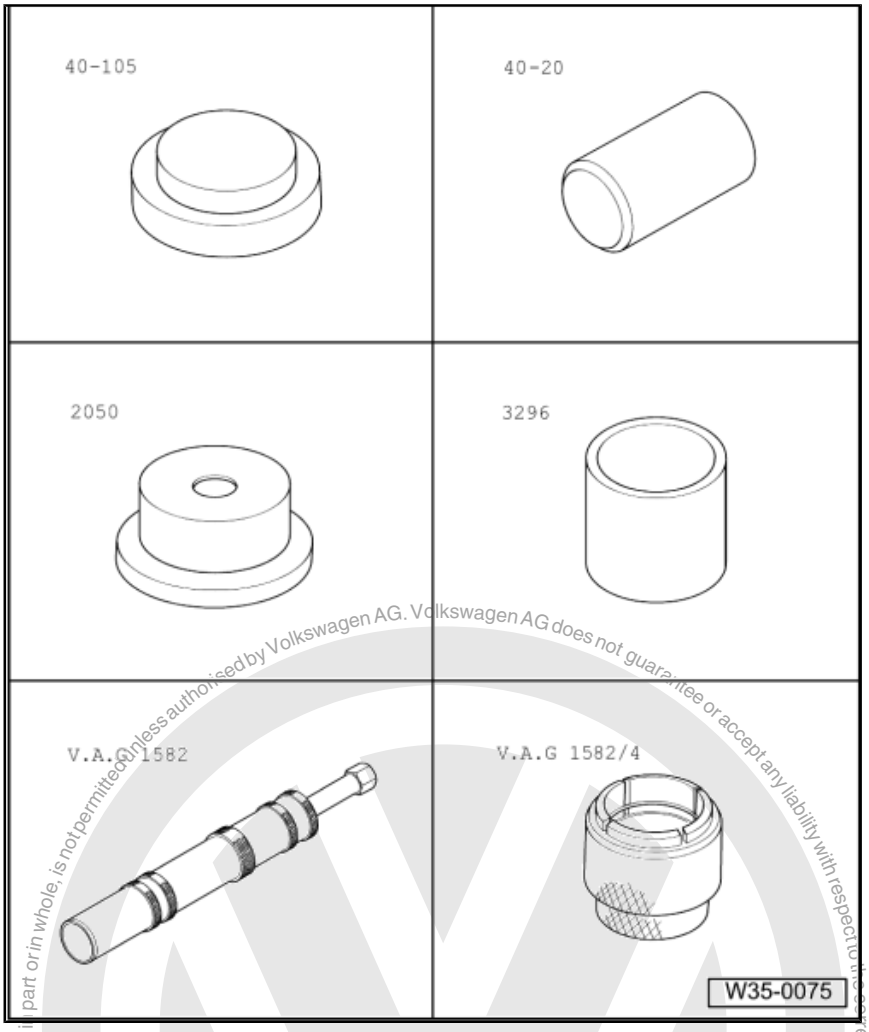

- Adapter -V.A.G 1582/7-

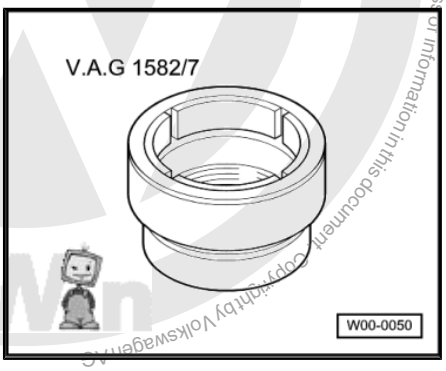

Protected by copyright. Copying for private or commercial purposes, in part or in whole, is not permitted unless authorised by Volkswagen AG. Volkswagen AG does not guarantee or accept any liability with respect to the correctness of information in this document. Copyright by Volkswagen AG.

Downloaded from www.Manualslib.com manuals search engine

- -1- Internal puller -Kukko 21/7-

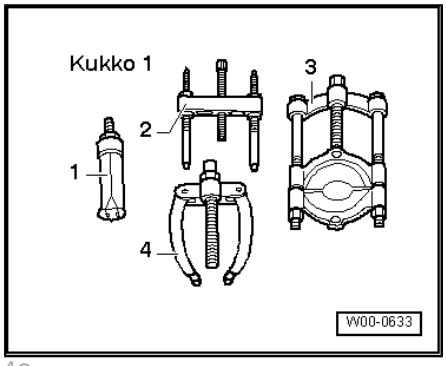

- -3- Splitter -Kukko 17/2-
- -4- Counter support -Kukko 22/2-

Note

- *If output shaft or tapered roller bearings have been renewed, adjust output shaft ⇒ page 222.*
- *Always renew both tapered roller bearings together as a set.*

1 - Clutch housing

2 - Washer
- ❑ Always 0.65 mm thick

3 - Tapered roller bearing outer race
- ❑ Pulling out ⇒ page 217
- ❑ Pressing in ⇒ page 217

4 - Tapered roller bearing inner race
- ❑ Pulling off ⇒ page 218
- ❑ Pressing on ⇒ page 221

5 - Output shaft
- ❑ For 5th, 6th and reverse gears
- ❑ Adjusting ⇒ page 222

6 - Reverse gear synchro-hub
- ❑ Pressing off ⇒ page 218
- ❑ Installation position ⇒ page 218
- ❑ Pressing on ⇒ page 219

7 - Retaining ring

8 - Reverse gear locking collar
- ❑ With synchro-ring

9 - Needle bearing
- ❑ For synchromeshed gear for reverse gear

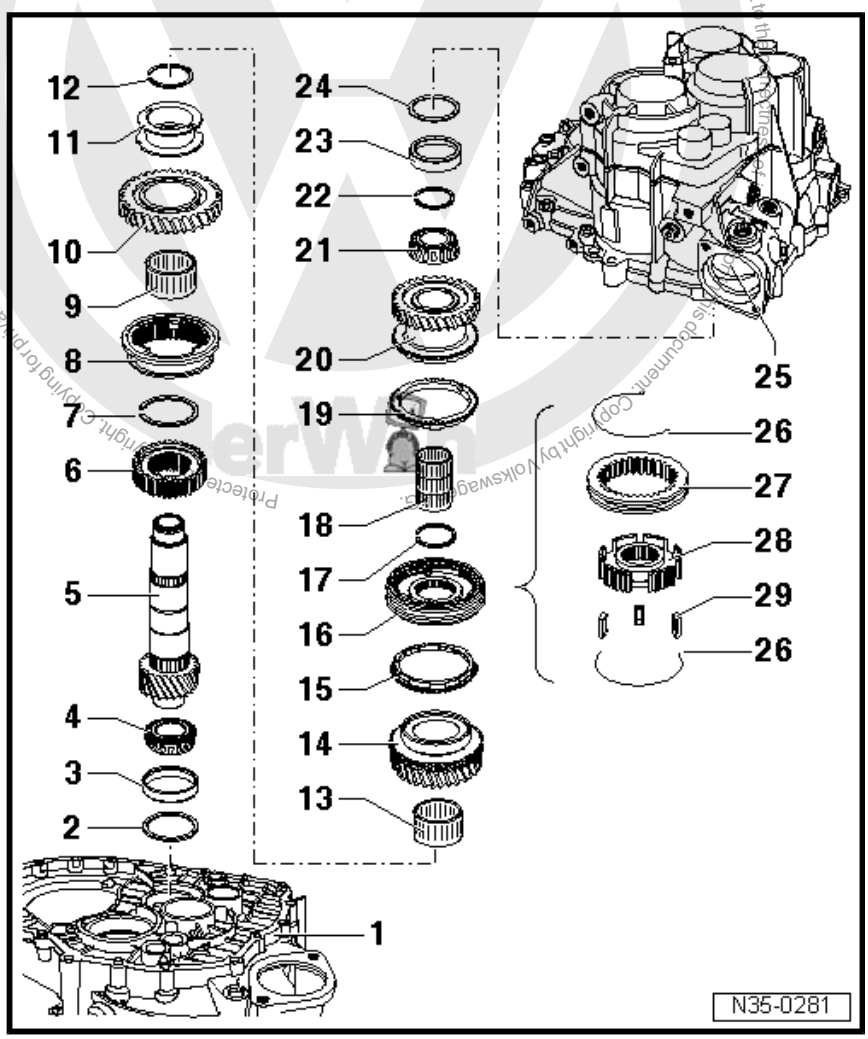

Protected by copyright. Copying for private or commercial purposes, in part or in whole, is not permitted unless authorised by Volkswagen AG. Volkswagen AG does not guarantee or accept any liability with respect to the correctness of information in this document. Copyright by Volkswagen AG.

Downloaded from www.Manualslib.com manuals search engine

10 - Synchromeshed gear for reverse gear

11 - Sleeve

- ❑ Press off together with synchromeshed gear for reverse gear ⇒ page 218
- ❑ Installation position: wide shoulder of sleeve faces synchromeshed gear for reverse gear
- ❑ Pressing on ⇒ page 219

12 - Retaining ring

13 - Needle bearing

- ❑ For 6th gear

14 - Synchromeshed gear for 6th gear

15 - Synchro-ring for 6th gear

- ❑ Check for wear ⇒ page 219

16 - Locking collar with synchro-hub for 5th and 6th gears

- ❑ After removing retaining ring ⇒ Item 17 (page 216) , press off with synchromeshed gear for 6th gear ⇒ page 217
- ❑ Dismantling ⇒ page 219
- ❑ Assembling locking collar and synchro-hub ⇒ page 219 and ⇒ page 220
- ❑ Pressing on ⇒ page 220

17 - Retaining ring

18 - Needle bearing

- ❑ For 5th gear

19 - Synchro-ring for 5th gear

- ❑ Check for wear ⇒ page 219

20 - Synchromeshed gear for 5th gear

21 - Tapered roller bearing inner race

- ❑ Pulling off ⇒ page 217
- ❑ Pressing on ⇒ page 220

22 - Retaining ring

- ❑ If tapered roller bearing ⇒ Item 21 (page 216) and output shaft ⇒ Item 5 (page 215) are renewed, redetermine ⇒ page 220

23 - Tapered roller bearing outer race

- ❑ Pulling out ⇒ page 221
- ❑ Pressing in ⇒ page 221

24 - Shim

- ❑ Determining thickness ⇒ page 222

25 - Gearbox housing

26 - Spring

- ❑ Installation position ⇒ page 220

27 - Locking collar

28 - Synchro-hub

29 - Locking pieces (Qty. 3)

- ❑ Installation position ⇒ page 219

Volkswagen AG. Volkswagen AG does not guarantee or accept any liability with respect to the correctness of information in this document. Copyright by Volkswagen AG.

Downloaded from www.Manualslib.com manuals search engine

Pulling out tapered roller bearing outer race

A - Counter support , e.g. -Kukko 22/2-

B - Internal puller, 46 … 58 mm , e.g. -Kukko 21/7-

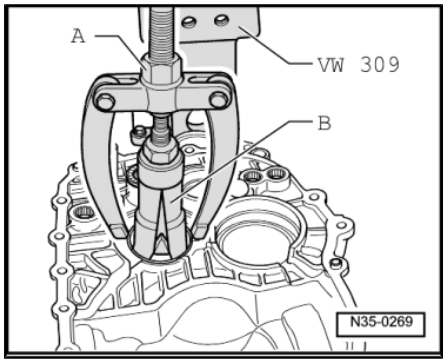

Note

After pulling out, check washer for damage and renew if necessary.

Pressing tapered roller bearing outer race into clutch housing

– Fit washer under outer race.

– Support clutch housing with drift sleeve -40 - 20- directly below bearing support.

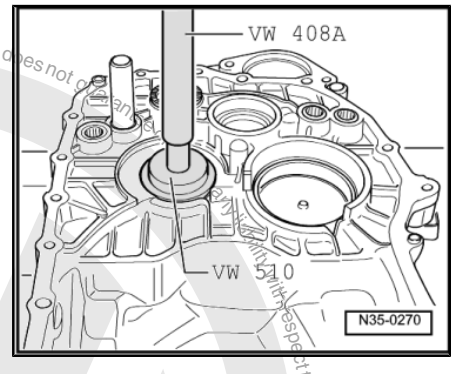

Pulling off tapered roller bearing inner race

– First remove retaining ring.

– Before setting up pulling device, set thrust piece -VW 431- and thrust plate -40 - 105- on output shaft.

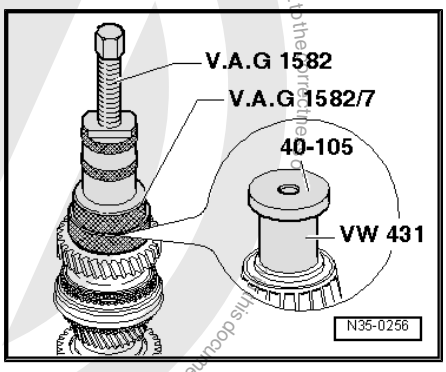

Pressing off synchro-hub and locking collar for 5th and 6th gears with synchromeshed gear for 6th gear

– First remove retaining ring.

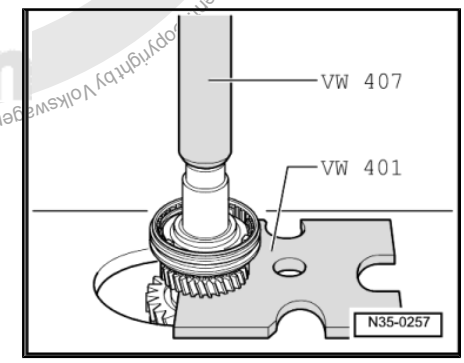

Protected by copyright. Copying for private or commercial purposes, in part or in whole, is not permitted unless authorised by Volkswagen AG. Volkswagen AG does not guarantee or accept any liability with respect to the correctness of this document. Copyright by Volkswagen AG.

Downloaded from www.Manualslib.com manuals search engine

Pressing off sleeve -A- together with synchromeshed gear for reverse gear

– First remove retaining ring.

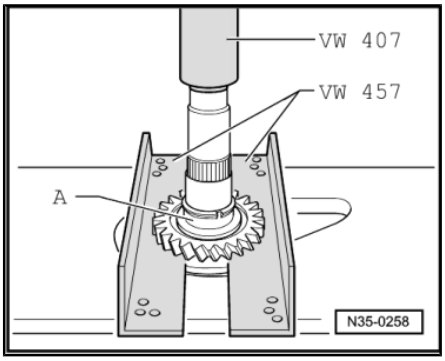

Pressing off reverse gear synchro-hub

– First remove retaining ring.

A - Splitter, 22 … 115 mm , e.g. -Kukko 17/2-

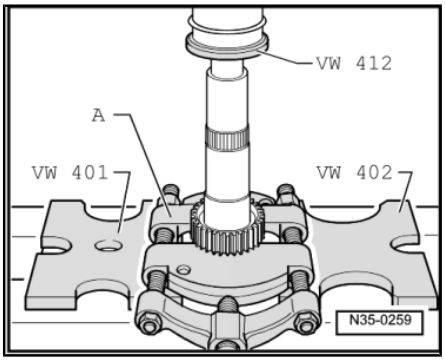

Pulling off tapered roller bearing inner race

– Before setting up pulling device, set thrust plate -30 - 11- on output shaft.

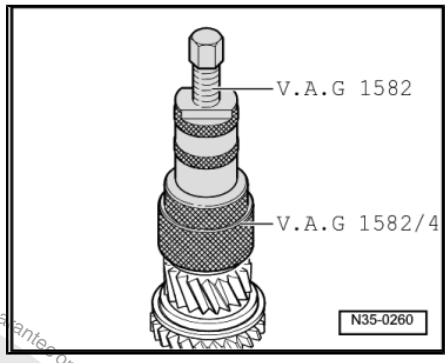

Installation position of reverse gear synchro-hub

Stop of reverse gear locking collar -arrow A- faces teeth of output shaft -arrow B-.

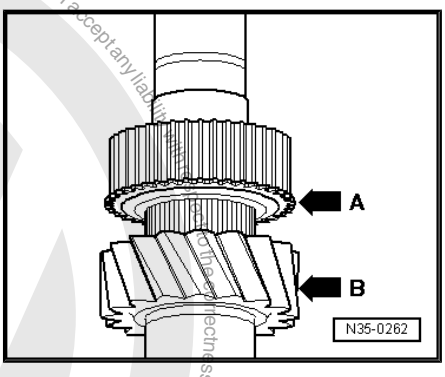

Protected by copyright. Copyright for private or commercial purposes, in part or in whole, is not permitted unless authorised by Volkswagen AG. Volkswagen AG does not guarantee or accept any liability with respect to the correctness of information in this document. Copyright by Volkswagen AG.

Downloaded from www.Manualslib.com manuals search engine

Pressing on reverse gear synchro-hub

– Install retaining ring.

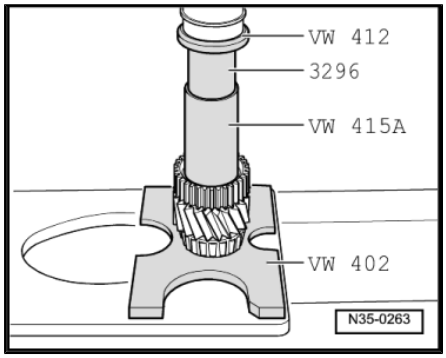

Pressing on sleeve -A-

Installation position: Wide collar faces reverse gear synchro-meshed gear.

– Install retaining ring.

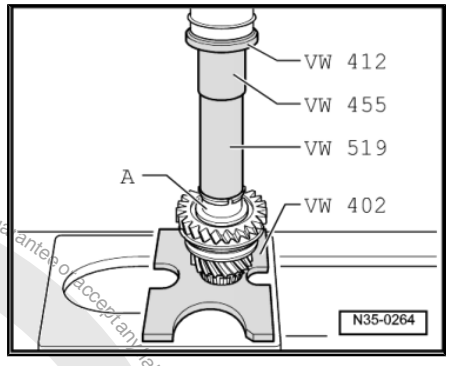

Checking synchro-rings for 5th and 6th gear for wear

– Press synchro-ring onto cone of synchromeshed gear and measure gap -a- using feeler gauge.

Gap -a-	Installation (new) dimension	Wear limit
5. and 6th gear	1.0 … 1.7 mm	0.5 mm

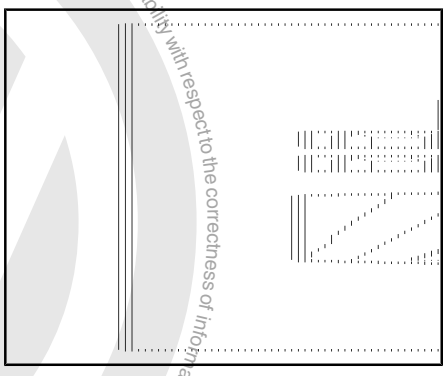

Dismantling and assembling locking collar and synchro-hub for 5th and 6th gears

1 - Spring

2 - Locking piece

3 - Locking collar

4 - Synchro-hub

– Slide locking collar over synchro-hub.

Notches for locking pieces in synchro-hub and locking collar must align.

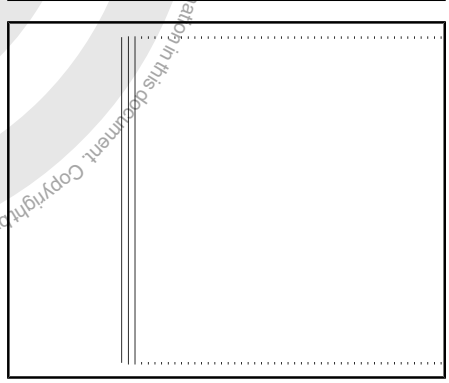

Protected by copyright. Copying for private and commercial purposes, in part or in whole, is not permitted unless authorised by Volkswagen AG. Volkswagen AG does not guarantee or accept any liability with respect to the correctness of information in this document. Copyright by Volkswagen AG.

Downloaded from www.Manualslib.com manuals search engine

Assembling locking collar with synchro-hub for 5th and 6th gears

Locking collar has been pushed over synchro-hub.

– Insert locking pieces and install springs offset 120°. Angled end of spring must locate in hollow locking piece.

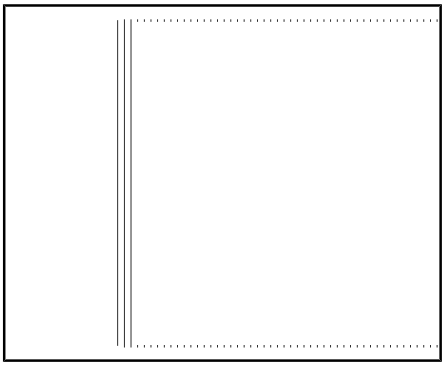

Pressing on locking collar and synchro-hub for 5th and 6th gears

– Install retaining ring.

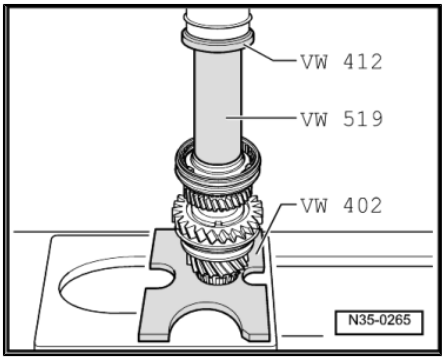

Pressing on tapered roller bearing inner race

– Determine and install retaining ring ⇒ page 220 .

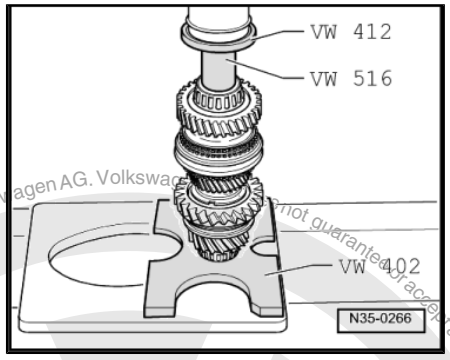

Determining thickness of retaining ring

– Determine thickest retaining ring which will still fit and install it.

– Determine retaining ring from table. Part number ⇒ Electronic parts catalogue „ETKA“ .

Available retaining rings

Thickness (mm)			
1.79	1.89		1.98
1.83	1.92		
1.86	1.95		

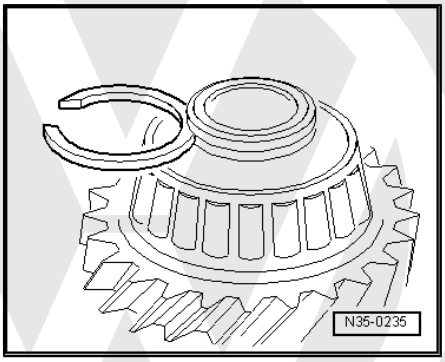

Protected by copyright. Copying for private or commercial purposes, in part or in whole, is not permitted unless authorised by Volkswagen AG. Volkswagen AG does not guarantee or accept any liability with respect to the correctness of information in this document. Copyright by Volkswagen AG.

Downloaded from www.Manualslib.com manuals search engine

Pressing on tapered roller bearing inner race

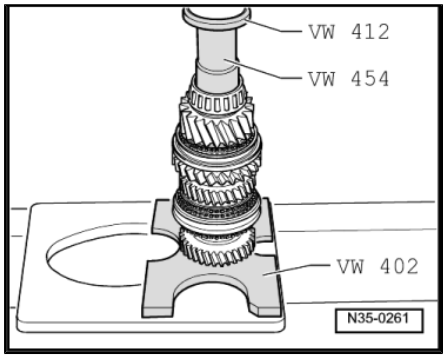

Pulling outer race for tapered roller bearing out of gearbox housing

A - Counter support , e.g. -Kukko 22/2-

B - Internal puller, 46 … 58 mm , e.g. -Kukko 21/7-

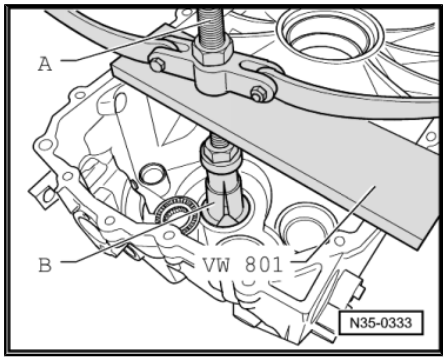

Pressing tapered roller bearing outer race into gearbox housing

– Support gearbox housing with thrust piece -2050- below bearing support.

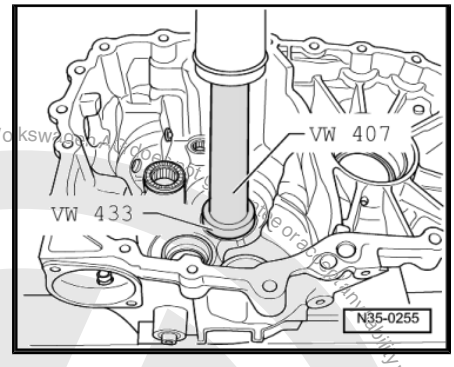

Protected by copyright. Copying for private or commercial purposes, in part or in whole, is not permitted unless authorised by Volkswagen AG. Volkswagen AG does not guarantee or assume any liability with respect to the correctness of information in this document. Copyright by Volkswagen AG.

Downloaded from www.Manualslib.com manuals search engine

3.2 Adjusting output shaft for 5th, 6th and reverse gears

Special tools and workshop equipment required

- Gearbox support -VW 353-
- Universal dial gauge bracket -VW 387-
- Press tool -VW 407-
- Thrust piece -VW 433-
- Assembly tool -VW 792-
- Support plate -VW 801-

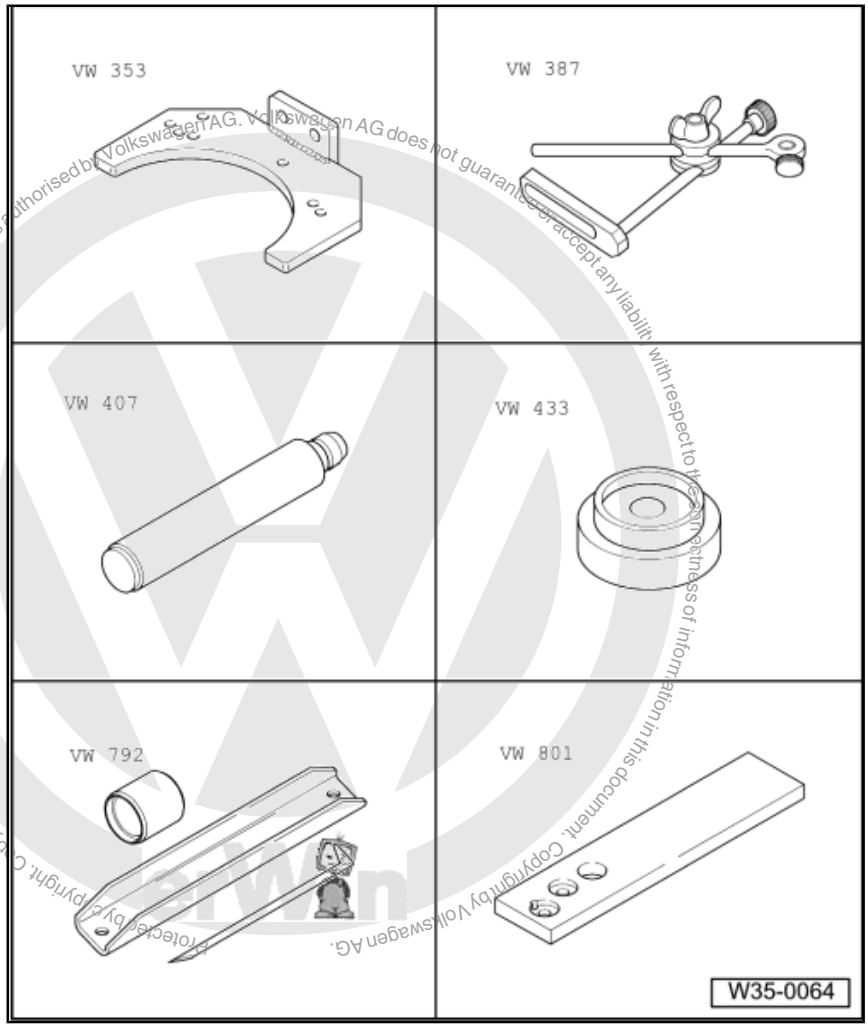

Protected by copyright. Copying for private or commercial purposes, in part or in whole, is not permitted unless authorised by Volkswagen AG. Volkswagen AG does not guarantee or accept any liability with respect to the correctness of information in this document. Copyright by Volkswagen AG.

Downloaded from www.Manualslib.com manuals search engine

- Support plate -VW 309-
- Thrust piece -2050-
- Torque wrench -V.A.G 1331-
- -1- Internal puller -Kukko 21/7-
- -4- Counter support -Kukko 22/2-

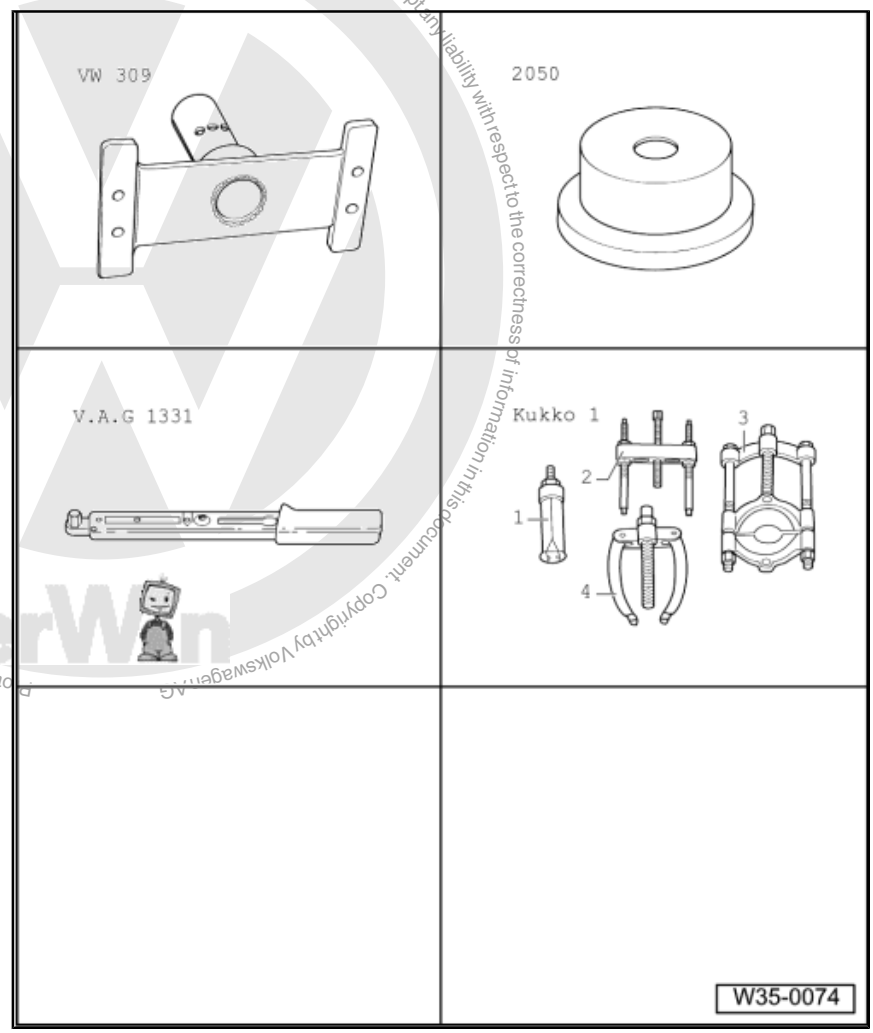

It is necessary to readjust the output shaft when the following components are renewed:

- Gearbox housing
- Clutch housing
- Output shaft for 5th, 6th and reverse gears or
- Tapered roller bearing for output shaft

Adjustment overview ⇒ page 232 .

Prerequisites:

- Sealing surfaces of clutch and gearbox housings must be free of sealant.
- When taking measurements, install only the output shaft to be measured.

Downloaded from www.Manualslib.com manuals search engine

– Press tapered roller bearing outer race with 1.70 mm thick shim into gearbox housing to stop. In the process, support gearbox housing using thrust piece -2050- directly below bearing support.

– Set complete 5th, 6th and reverse gear output shaft in clutch housing.

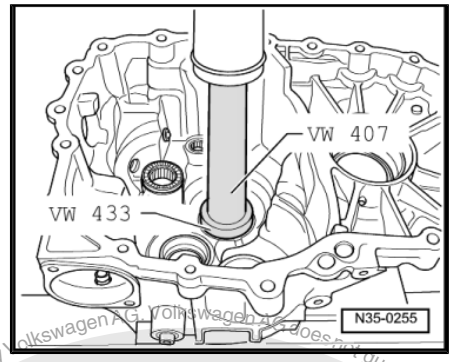

– Set gearbox housing in position and tighten bolts -A- as well as -B- alternately and diagonally to specified torque.

– Set up measuring tools.

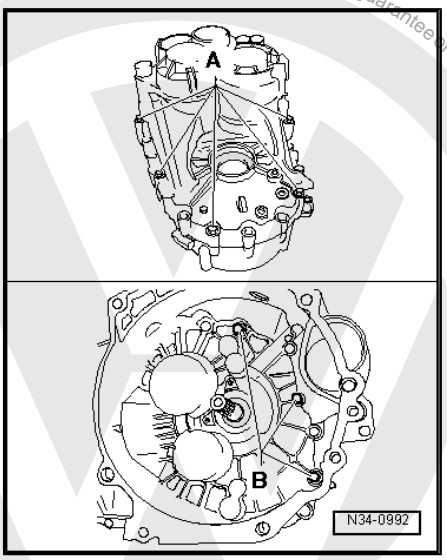

– If the edge of the housing protrudes, put washers with a total thickness of 8 mm on bolt -arrow- for securing assembly device -VW 792- to clutch housing.

– Set dial gauge (3 mm measuring range) to „0“ with 1 mm preload.

– Loosen clutch housing/gearbox housing securing bolts diagonally until the bolts release the gearbox housing or output shaft.

– Read and note value on dial gauge (example: 0.25 mm).

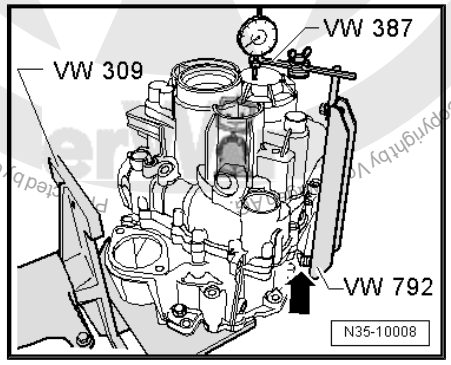

Note

- *If dial gauge indicates no value when clutch housing/gearbox housing securing bolts are loosened, install a 1.95 mm shim or, if necessary, a 2.20 mm shim.*
- *Allocate shims according to ⇒ Electronic parts catalogue „ETKA“.*

3.2.1 Determining thickness of shim

The specified bearing preload will be attained by subtracting the measured value (0.25 mm) from the inserted shim (1.70 mm) and adding a constant value for preload (0.20 mm).

Example:

Installed shim	1.70 mm

Downloaded from www.Manualslib.com manuals search engine

- Measured value	0.25 mm
+ Preload (constant)	0.20 mm
Shim thickness	1.65 mm

– Determine thickness of shim from table ⇒ page 225 .

– Remove gearbox housing and pull tapered roller bearing outer race from gearbox housing.

A - Counter support , e.g. -Kukko 22/2-

B - Internal puller, 46 … 58 mm , e.g. -Kukko 21/7-

– Remove inserted shim (1.70 mm thick) from gearbox housing.

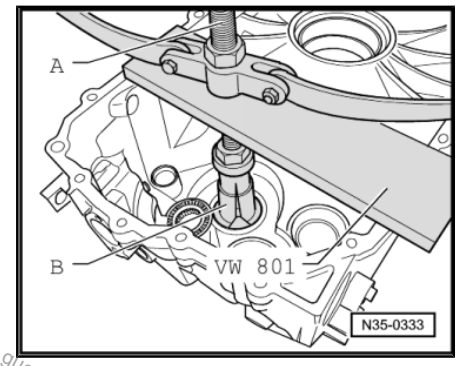

3.2.2 Table of shims

Thickness (mm)		
1.50	1.80	2.10
1.55	1.85	2.15
1.60	1.90	2.20
1.65	1.95	2.25
1.70	2.00	
1.75	2.05	

– Part numbers ⇒ Electronic parts catalogue „ETKA“ .

The various thicknesses make it possible to achieve the exact shim thickness required.

– Press in tapered roller bearing outer race together with correct shim (in example 1.65 mm). In the process, support gearbox housing using thrust piece -2050- directly below bearing support.

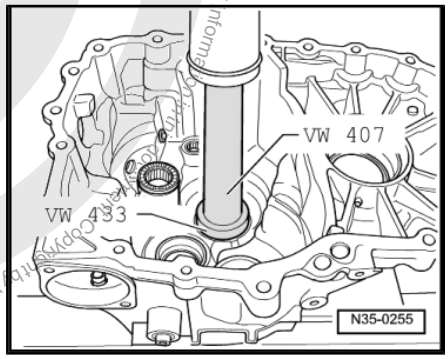

3.2.3 Carrying out check measurement

• Determined shim installed.

– Set up measuring tools.

Protected by copyright. Copying for private or commercial purposes, in part or in whole, is not permitted unless authorised by Volkswagen AG. Volkswagen AG does not guarantee or accept any liability with respect to the correctness of information.

Downloaded from www.Manualslib.com manuals search engine

- If the edge of the housing protrudes, put washers with a total thickness of 8 mm on bolt -arrow- for securing assembly device -VW 792- to clutch housing.
- Set dial gauge (3 mm measuring range) to „0“ with 1 mm preload.
- Loosen clutch housing/gearbox housing securing bolts diagonally until the bolts release the gearbox housing or output shaft.
- If correct shim has been selected, dial gauge will indicate a value between 0.15 mm to 0.25 mm.

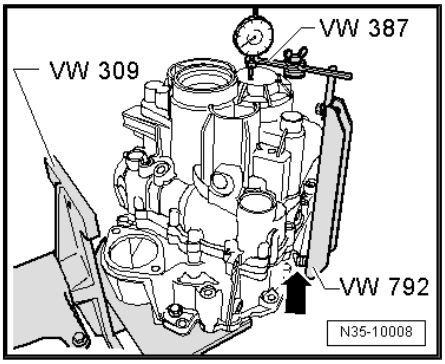

Protected by copyright. Copying for private or commercial purposes, in part or in whole, is not permitted unless authorised by Volkswagen AG. Volkswagen AG does not guarantee or accept any liability with respect to the correctness of information in this document. Copyright by Volkswagen AG.

Downloaded from www.Manualslib.com manuals search engine

39 – Final drive - differential

1 Renewing flange shaft oil seals with gearbox installed

1.1 Renewing oil seal for left flange shaft

Special tools and workshop equipment required

- Multipurpose tool -VW 771-
- Puller hooks -VW 771/37-
- Thrust piece -3305-
- Torque wrench - V.A.G 1331-
- Torque wrench - V.A.G 1332-
- Sealing grease -G 052 128 A1-
- Drip tray

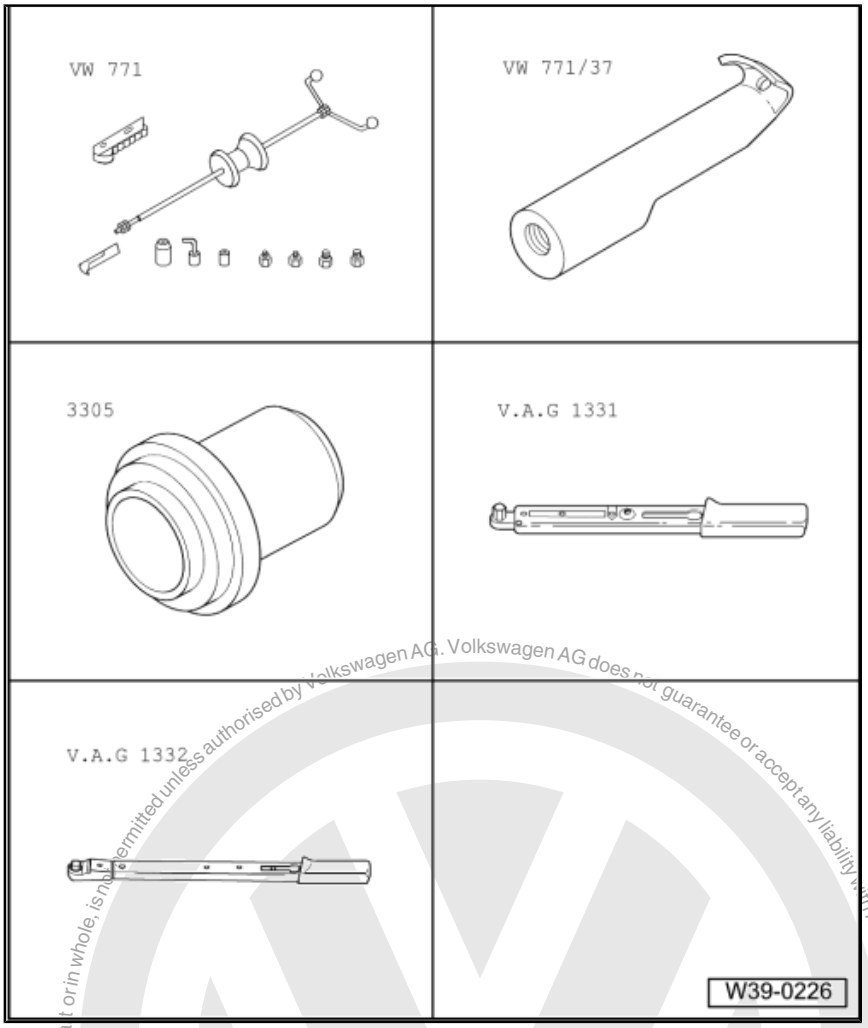

Protected by copyright. Copying for private or commercial purposes, in part or in whole, is not permitted unless authorised by Volkswagen AG. Volkswagen AG does not guarantee or accept any liability with respect to the correctness of information in this document. Copyright by Volkswagen AG.

Downloaded from www.Manualslib.com manuals search engine

Protected by copyright. Copyright by Volkswagen AG. Volkswagen AG does not guarantee or accept any liability with respect to the correctness of information in this document. Copyright by Volkswagen AG. Commercial purposes, in part or in whole, is not permitted unless authorised by Volkswagen AG. For private use only.

♦ Drip tray for workshop hoist -VAS 6208-

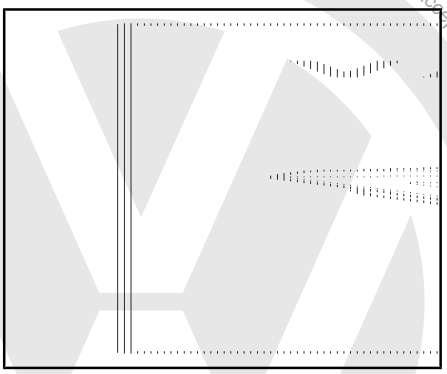

1.1.1 Removing

– Remove left wheel.

– Remove noise insulation ⇒ General body repairs, exterior; Rep. gr. 50 ; Noise insulation .

– Remove lower part of front left wheel housing liner ⇒ General body repairs, exterior; Rep. gr. 66 ; Wheel housing liner .

– Remove left drive shaft ⇒ Running gear, axles, steering; Rep. gr. 40 ; Repairing drive shafts; Removing and installing drive shafts .

– Place drip tray under gearbox.

– Remove flange shaft securing bolt by screwing two bolts into flange and counterholding flange shaft with a lever.

– Pull out flange shaft with compression spring.

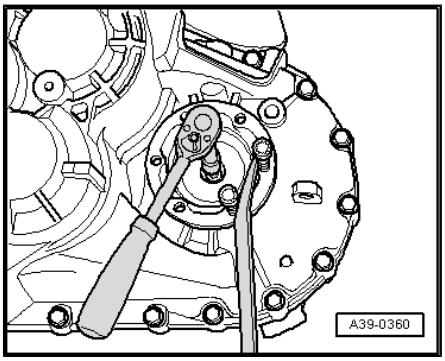

– Remove flange shaft oil seal.

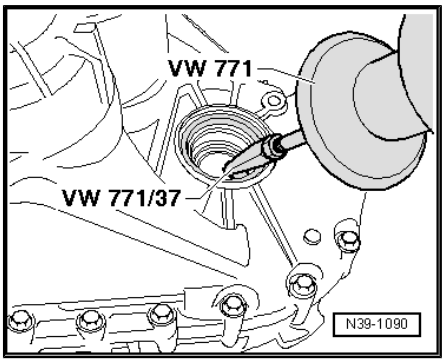

Downloaded from www.Manualslib.com manuals search engine

1.1.2 Installing

– Drive in new seal to stop, being careful not to cant seal.

– Half-fill space between sealing lip and dust lip with sealing grease -G 052 128 A1- .

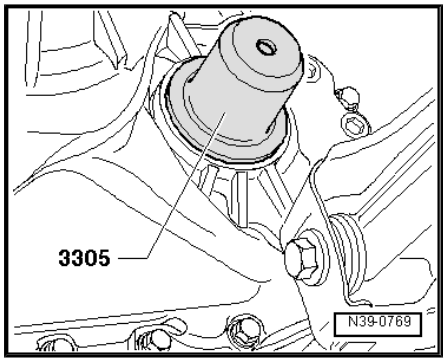

– Insert flange shaft.

– Secure flange shaft using countersunk bolt and tighten to specified torque ⇒ Item 10 (page 235) .

– Install left drive shaft ⇒ Running gear, axles, steering; Rep. gr. 40 ; Repairing drive shafts; Removing and installing drive shafts .

– Install lower part of front left wheel housing liner ⇒ General body repairs, exterior; Rep. gr. 66 ; Wheel housing liner .

– Install wheel ⇒ Running gear, axles, steering; Rep. gr. 44 ; Torque settings for mounting wheels .

– Check gear oil ⇒ page 126 .

– Install noise insulation ⇒ General body repairs, exterior; Rep. gr. 50 ; Noise insulation .

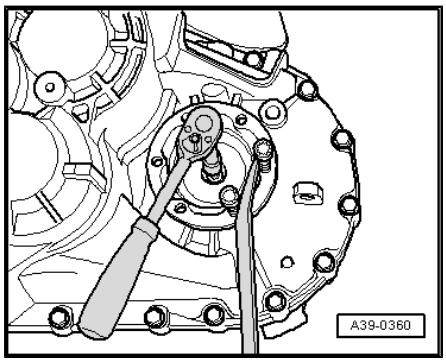

1.2 Renewing seal for right flange shaft

Special tools and workshop equipment required

♦ Thrust piece -3305-

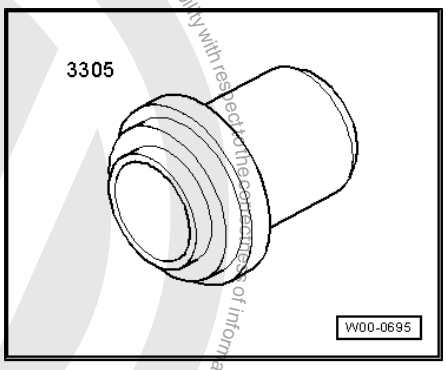

♦ Torque wrench -V.A.G 1331-

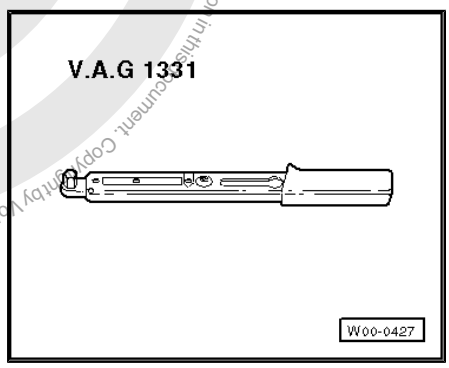

Protected by copyright. Copying for private or commercial purposes, in part or in whole, is not permitted unless authorised by Volkswagen AG. Volkswagen AG does not guarantee or accept any liability with respect to the correctness of information in this document. Copyright by Volkswagen AG.

Downloaded from www.Manualslib.com manuals search engine

♦ Drip tray for workshop hoist -VAS 6208-

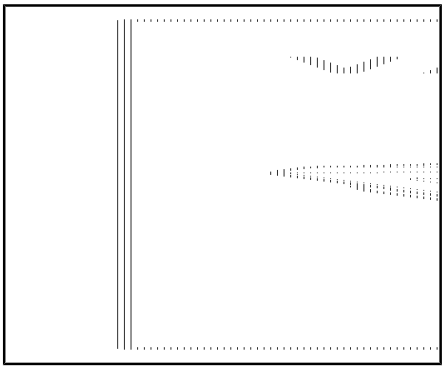

♦ Sealing grease -G 052 128 A1-

1.2.1 Removing

– Remove noise insulation ⇒ General body repairs, exterior; Rep. gr. 50 ; Noise insulation .

– Remove drive shaft heat shield from engine -arrows-, if fitted.

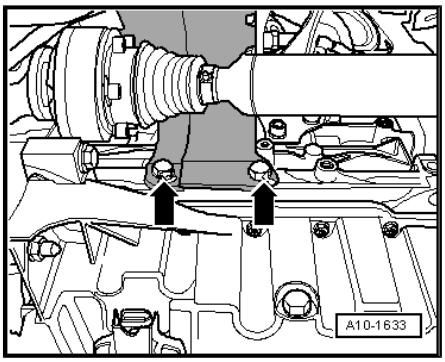

– Removing right drive shaft from gearbox flange shaft -A-

– Secure drive shafts with wire, taking care not to damage surface protection.

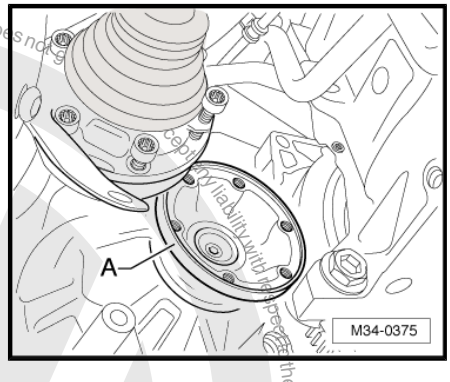

Note

♦ *With some engines, the drive shaft cannot be raised and secured high enough that the flange shaft can be pulled out.*

♦ *In that case, remove drive shaft ⇒ Running gear, axles, steering; Rep. gr. 40 ; Removing and installing drive shafts .*

– Place drip tray under gearbox.

– Remove flange shaft securing bolt by screwing two bolts into flange and counterholding flange shaft with a lever.

– Pull out flange shaft with compression spring.

– Pry seal out using assembly lever.

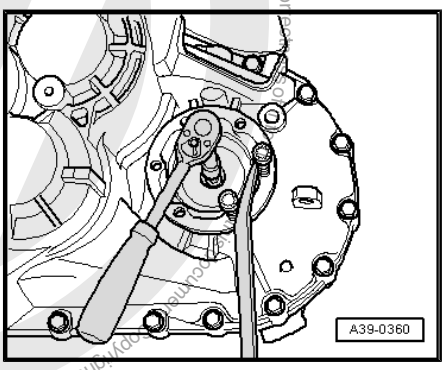

Protected by copyright. Copying for private or commercial purposes, in part or in whole, is not permitted unless authorised by Volkswagen AG. Volkswagen AG does not guarantee or accept any liability with respect to the correctness and completeness of this copy.

Downloaded from www.Manualslib.com manuals search engine

1.2.2 Installing

– Drive in new seal to stop, being careful not to cant seal.

– Half-fill space between sealing lip and dust lip with sealing grease -G 052 128 A1- .

– Secure flange shaft -A- using countersunk bolt and tighten to specified torque ⇒ Item 10 (page 235) .

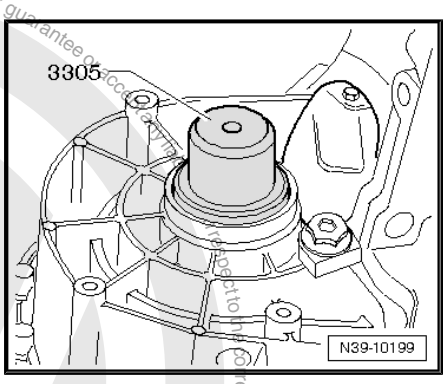

– Attach right drive shaft to gearbox flange shaft -A- ⇒ Running gear, axles, steering; Rep. gr. 40 ; Repairing drive shaft; Removing and installing drive shafts .

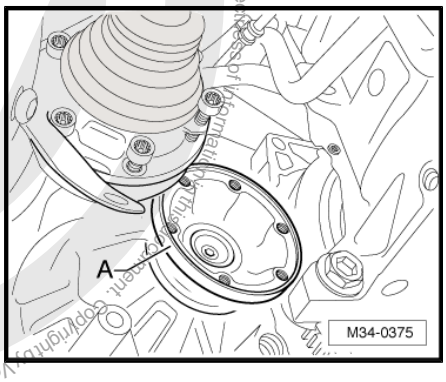

– Install drive shaft heat shield, if present, on engine. Tighten bolts -arrows- to specified torque ⇒ Running gear, axles, steering; Rep. gr. 40 ; Repairing drive shafts .

– Check gear oil ⇒ page 126 .

– Install noise insulation ⇒ General body repairs, exterior; Rep. gr. 50 ; Noise insulation .

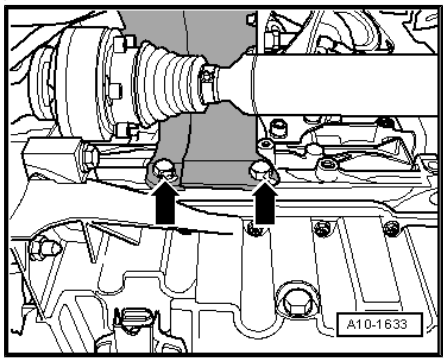

Copyright by Volkswagen AG. Volkswagen AG does not guarantee or accept any liability with respect to the correctness of information in this copy. Copyright by Volkswagen AG. Reproduced by copyright. Copying for private or commercial purposes, in part or in whole, is not permitted unless authorised by Volkswagen AG.

Downloaded from www.Manualslib.com manuals search engine

2 Adjustment overview

Note

If repairs have been carried out on the gearbox, it is necessary to readjust output shaft for 1st through 4th gear, output shaft for 5th, 6th and reverse gear or differential only if components have been renewed which have a direct effect on the adjustment of the gearbox. To prevent unnecessary adjustments, refer to the following table:

		To be adjusted:		
		Output shaft for 1st through 4th gears ⇒ page 206	Output shaft for 5th, 6th and reverse gears ⇒ page 222	Differential ⇒ page 239
Parts renewed:	Gearbox housing	x	x	x
	Clutch housing	x	x	x
	Output shaft for 1st through 4th gears	x		
	Output shaft for 5th, 6th and reverse gears		x	
	Differential cage			x
	Tapered roller bearings for 1st to 4th gear output shaft	x		
	Tapered roller bearings for 5th, 6th and reverse gear output shaft		x	
	Tapered roller bearing for differential			x

Protected by copyright. Copying for private or commercial purposes, in part or in whole, is not permitted unless authorised by Volkswagen AG. Volkswagen AG does not guarantee or accept any liability with respect to the correctness of information in this document. Copyright by Volkswagen AG.

Downloaded from www.Manualslib.com manuals search engine

3 Differential

3.1 Dismantling and assembling differential

Special tools and workshop equipment required

- Thrust plate -VW 402-
- Press tool -VW 408 A-
- Press tool -VW 412-
- Tube -VW 415 A-
- Thrust plate -40 - 105-
- Thrust plate -3005-

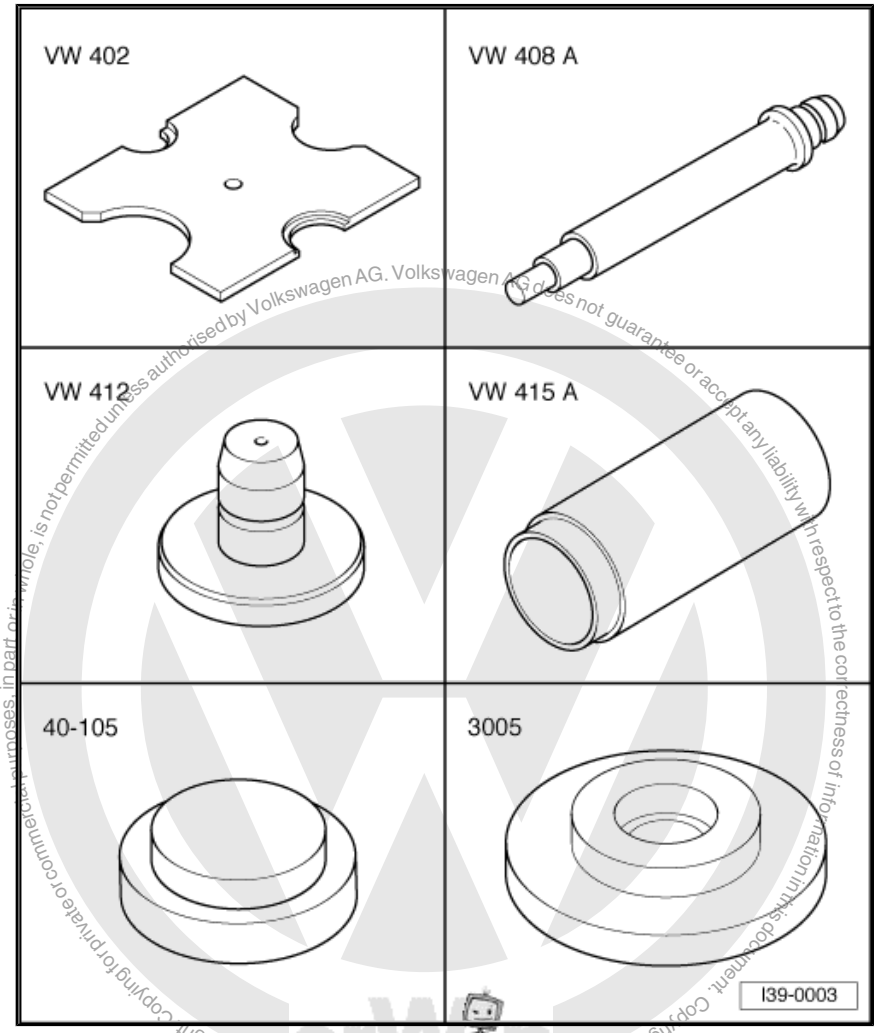

Protected by copyright. Copying for private or commercial purposes, in part or in whole, is not permitted unless authorised by Volkswagen AG. Volkswagen AG does not guarantee or accept any liability with respect to the correctness of information in this document. Copyright by Volkswagen AG.

Downloaded from www.Manualslib.com manuals search engine

- Tube -3259-
- Tube -3296-
- Tube -3345-
- Tapered roller bearing puller -V.A.G 1582-
- Adapter -V.A.G 1582/6A-
- -1- Internal puller -Kukko 21/7-
- -2- Puller -Kukko 18/1-
- -3- Splitter -Kukko 17/1-
- -4- Counter support -Kukko 22/2-

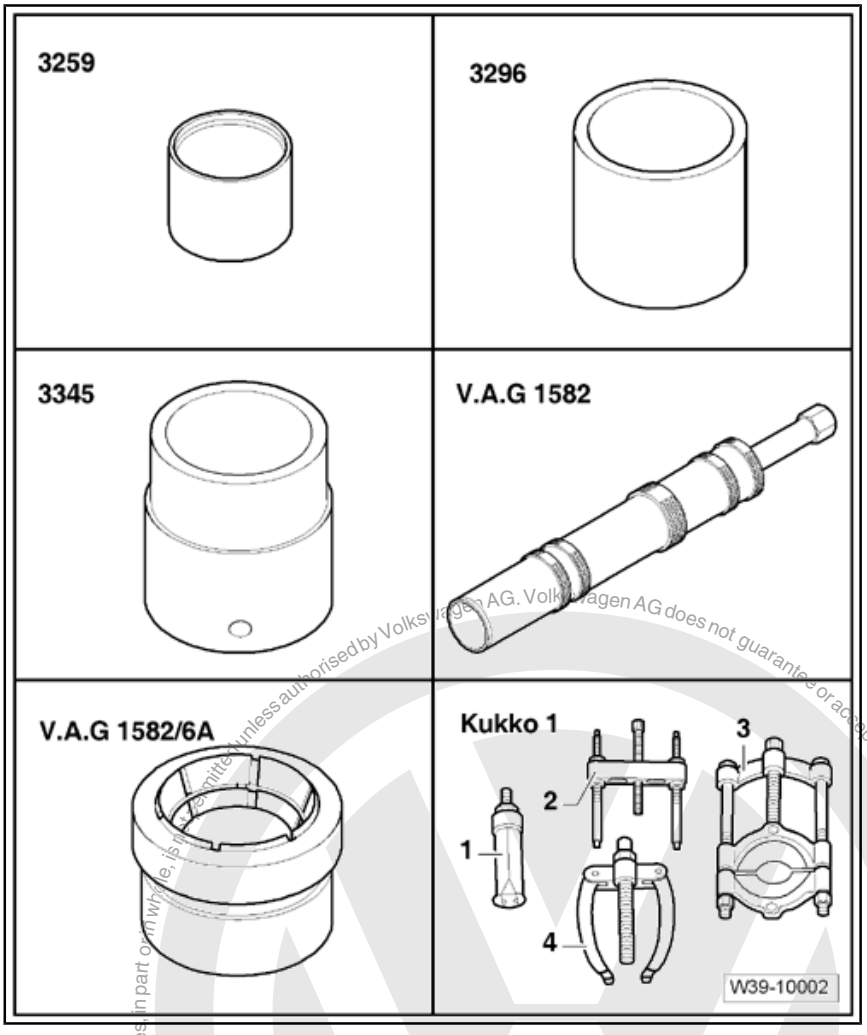

Note

- *Heat tapered roller bearing inner race to approx. 100 °C before installing.*
- *Always renew both tapered roller bearings together as a set.*
- *If tapered roller bearings, differential cage, gearbox housing or clutch housing is renewed, adjust differential* *⇒ page 239* .

Protected by copyright. Copying for private or commercial purposes, in part or in whole, is not permitted unless authorised by Volkswagen AG. Volkswagen AG does not guarantee or accept any liability with respect to the correctness of information in this document. Copyright by Volkswagen AG.

Downloaded from www.Manualslib.com manuals search engine

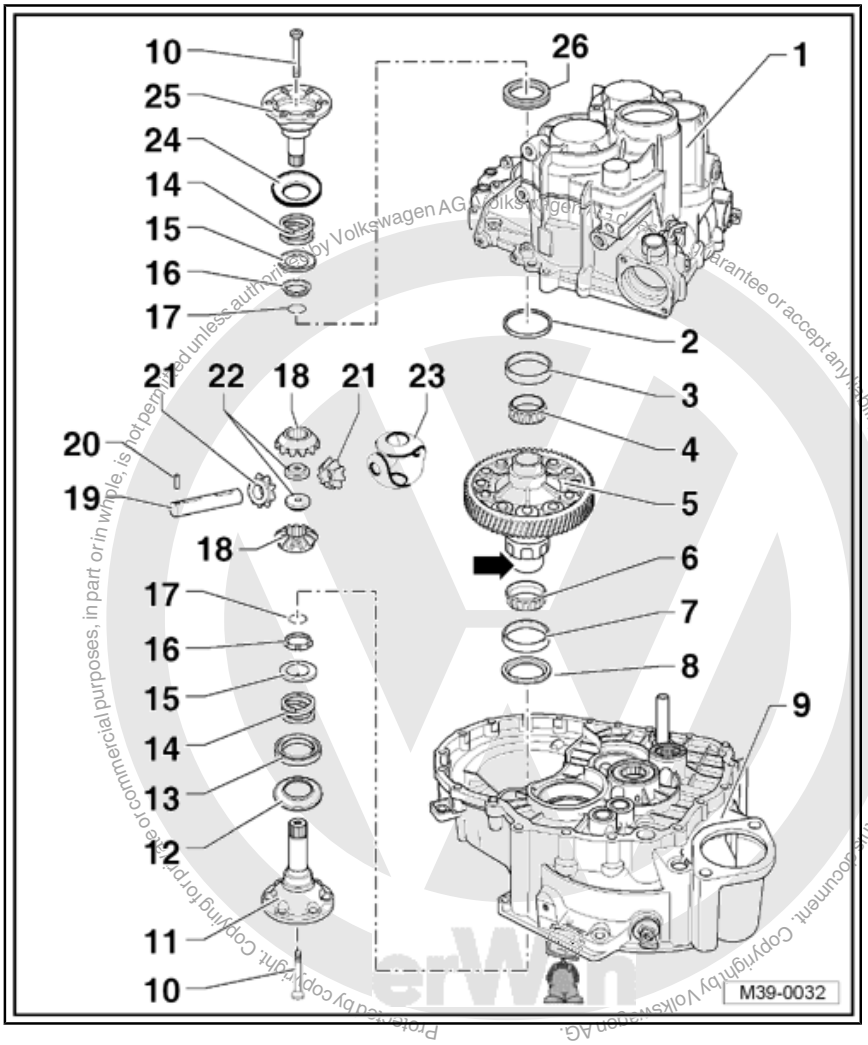

1 - Gearbox housing

2 - Shim

- ❑ For differential
- ❑ Determining thickness ⇒ page 239

3 - Tapered roller bearing outer race

- ❑ Pulling out ⇒ page 238
- ❑ Pressing in ⇒ page 238

4 - Tapered roller bearing inner race

- ❑ Pulling off ⇒ page 237
- ❑ Pressing on ⇒ page 237

5 - Differential cage

- ❑ With riveted final drive gear

6 - Tapered roller bearing inner race

- ❑ Pulling off ⇒ page 237
- ❑ Pressing on ⇒ page 238

7 - Tapered roller bearing outer race

- ❑ Pulling out ⇒ page 236
- ❑ Pressing in ⇒ page 237

8 - Washer

- ❑ Installation position: shoulder on inner circumference faces seal ⇒ Item 13 (page 235)
- ❑ Allocation ⇒ Electronic parts catalogue „ETKA“

9 - Clutch housing

10 - Countersunk bolt, 33 Nm

- ❑ Screw into threaded piece ⇒ Item 22 (page 236)

11 - Right flange shaft

12 - Protective ring

- ❑ Pry protective ring off flange shaft with a screwdriver, alternating sides ⇒ Item 11 (page 235)
- ❑ Install with indentation facing away from threaded hole in flange shaft
- ❑ Push on protective ring to stop by hand
- ❑ Protective ring must engage in flange shaft

13 - Seal

- ❑ For right flange shaft
- ❑ Allocation ⇒ Electronic parts catalogue „ETKA“
- ❑ Renewing with gearbox installed ⇒ page 229

14 - Compression spring for flange shaft

- ❑ Installed behind flange shaft

Protected by copyright. Copying for private or commercial purposes, in part or in whole, is not permitted unless authorised by Volkswagen AG. Volkswagen AG does not guarantee or accept any liability with respect to the correctness of information in this document. Copyright by Volkswagen AG.

Downloaded from www.Manualslib.com manuals search engine

15 - Thrust washer

- ❑ Installation position: shoulder faces spring, lugs, if present, face tapered ring

16 - Tapered ring

- ❑ Installation position: taper towards differential cage

17 - Retaining ring

- ❑ Holds tapered ring, thrust washer and spring in position when flange shaft is removed

18 - Sun wheel

- ❑ Installing ⇒ page 239

19 - Differential pinion pin

- ❑ Drive out using drift
- ❑ Installing ⇒ page 239

20 - Spring pin

- ❑ For securing differential pinion pin
- ❑ Removing and installing ⇒ page 238

21 - Planet pinion

- ❑ Installing ⇒ page 239

22 - Threaded piece

- ❑ Installing ⇒ page 239

23 - One-piece thrust washer

- ❑ Coat with gear oil when installing

24 - Protective ring

- ❑ Pry protective ring off flange shaft with a screwdriver, alternating sides ⇒ Item 25 (page 236)
- ❑ Install with indentation facing away from threaded hole in flange shaft
- ❑ Push on protective ring to stop by hand
- ❑ Protective ring must engage in flange shaft

25 - Left flange shaft

26 - Seal

- ❑ For left flange shaft
- ❑ Allocation ⇒ Electronic parts catalogue „ETKA“
- ❑ Renewing with gearbox installed ⇒ page 227

Pulling tapered roller bearing outer race out of clutch housing

A - Counter support , e.g. -Kukko 22/2-

B - Internal puller, 46 … 58 mm , e.g. -Kukko 21/7-

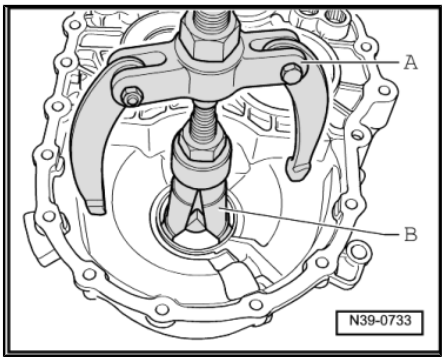

Note

After pulling out, renew washer.

Protected by copyright. Copying for private or commercial purposes, in part or in whole, is not permitted unless authorised by Volkswagen AG. Volkswagen AG does not guarantee or accept any liability with respect to the correctness of information in this document. Copyright by Volkswagen AG.

Downloaded from www.Manualslib.com manuals search engine

Press tapered roller bearing outer race with washer into clutch housing

– First insert washer.

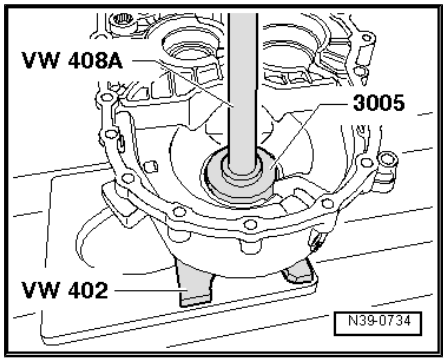

Note

- *Observe installation position of washer.*
- *Shoulder on inner circumference faces seal in clutch housing.*

Pulling off tapered roller bearing inner race

– Before setting up pulling device, set thrust plate -40 - 105- on differential housing.

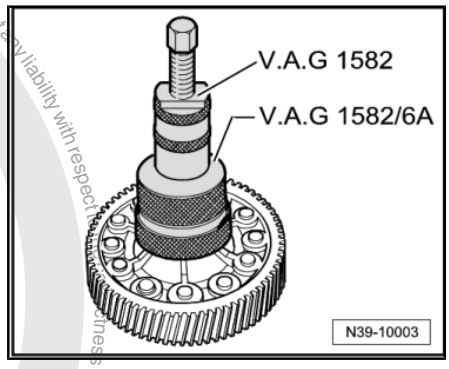

Pressing on tapered roller bearing inner race

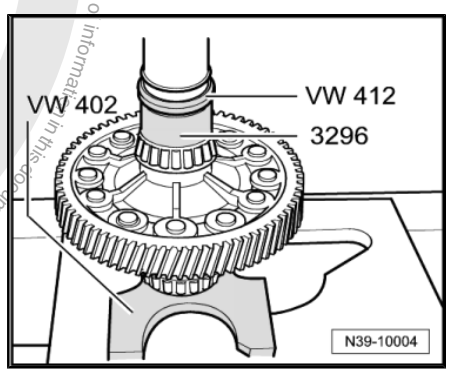

Pulling off tapered roller bearing inner race

A - Puller , e.g. -Kukko 18/1-

B - Splitter, 12 … 75 mm , e.g. -Kukko 17/1-

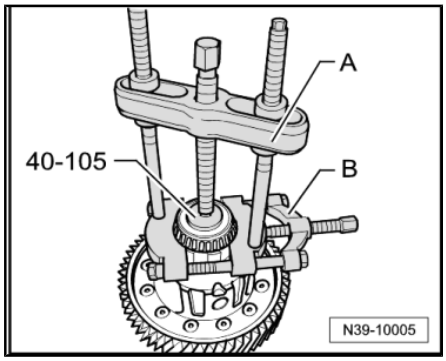

Protected by copyright. Copyright by Volkswagen AG.

Downloaded from www.Manualslib.com manuals search engine

Pressing on tapered roller bearing inner race

Cage with tapered rollers must be easy to turn during pressing.

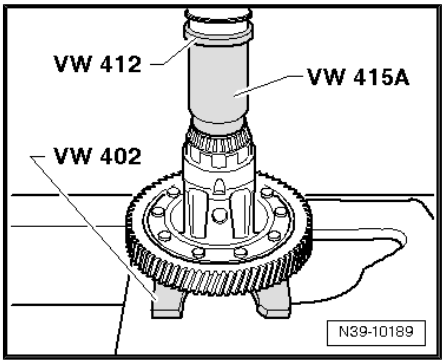

Pulling outer race for tapered roller bearing out of gearbox housing

A - Counter support , e.g. -Kukko 22/2-

B - Internal puller, 46 … 58 mm , e.g. -Kukko 21/7-

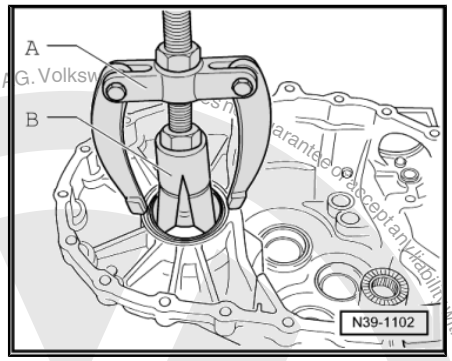

Pressing tapered roller bearing outer race into gearbox housing

– Support gearbox housing with tube -3345- directly below bearing support.

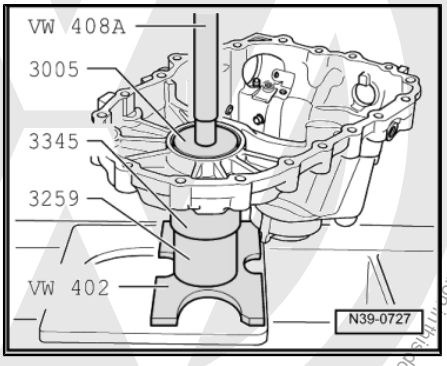

Removing and installing spring pin for differential pinion pin

Removing

– Cover tapered roller bearing inner race to avoid possible damage and entry of metal particles.

– Drive out spring pin with chisel, inserting chisel into circumferential groove.

Installing

– Drive into differential cage to stop.

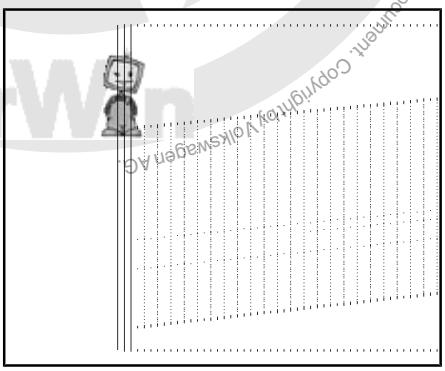

Protected by copyright. Copying for private or commercial purposes, in part or in whole, is not permitted unless authorised by Volkswagen AG. Volkswagen AG does not guarantee or accept any liability with respect to the correctness of information in this document. Copyright by Volkswagen AG.

Downloaded from www.Manualslib.com manuals search engine

Installing differential bevel gears

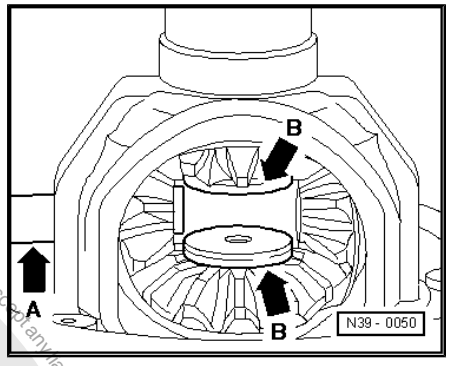

- Lubricate one-piece thrust washer with gear oil and install.
- Install both sun wheels and secure (e.g. with flange shaft).
- Insert planet pinions offset 180° and pivot into position.
- Press in differential pinion pin (-arrow A-) to first planet pinion.
- Place threaded pieces -arrows B- in sun gears.

Installation position: shoulder to sun gear

- Drive differential pinion pin into final position and secure with spring pin.

3.2 Adjusting differential

Special tools and workshop equipment required

- Gearbox support -VW 353-
- End dimension plate -VW 385/17-
- Universal dial gauge bracket -VW 387-
- Thrust plate -VW 402-
- Press tool -VW 408 A-
- Thrust plate -3005-

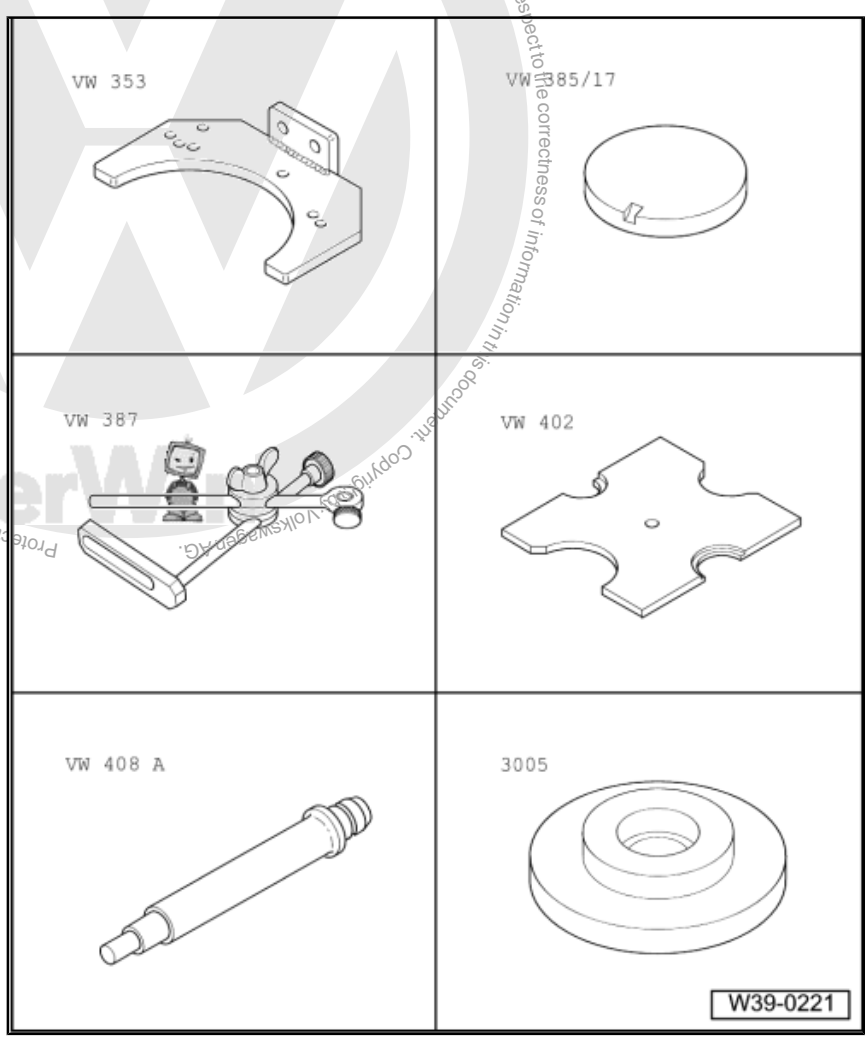

Protected by copyright. Copying for private or commercial purposes, in part or in whole, is not permitted unless authorised by Volkswagen AG. Volkswagen AG does not guarantee or accept any liability with respect to the correctness of information in this document. Copyright by Volkswagen AG.

Downloaded from www.Manualslib.com manuals search engine

- Tube -3259-
- Tube -3345-
- Torque wrench -V.A.G 1331-
- -1- Internal puller -Kukko 21/7-
- -4- Counter support -Kukko 22/2-

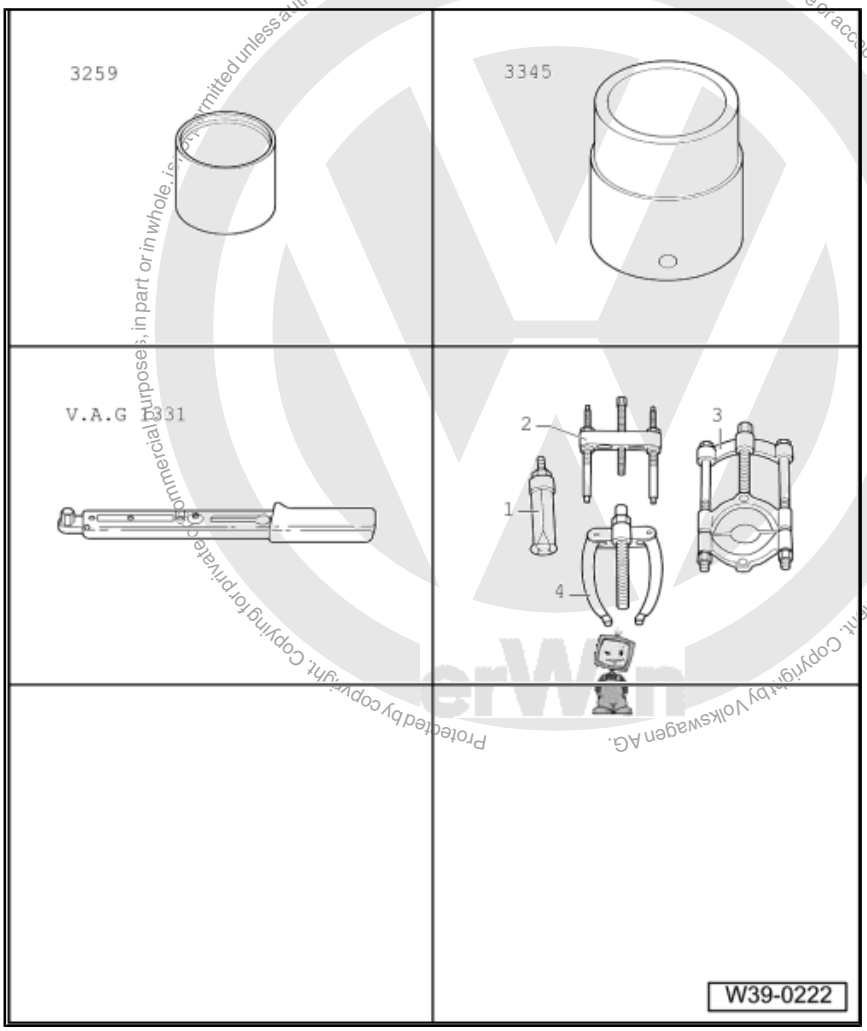

It is necessary to readjust the differential when the following components are renewed:

- Gearbox housing
- Clutch housing
- Differential cage or
- Tapered roller bearing of differential

Adjustment overview ⇒ page 232 .

– Press tapered roller bearing outer race with washer into clutch housing.

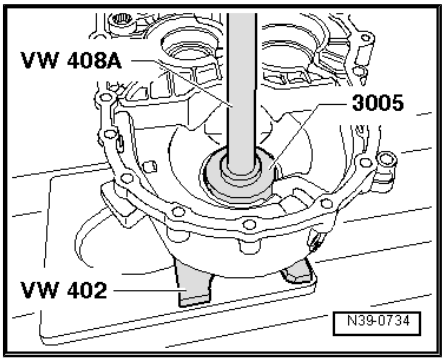

Note

- *Observe installation position of washer.*
- *Shoulder on inner circumference faces seal in clutch housing.*

Downloaded from www.Manualslib.com manuals search engine

– Press tapered roller bearing outer race, without shim, into gearbox housing.
– Fit differential into clutch housing.
– Fit gearbox housing and tighten 5 bolts to specified torque ⇒ Item 11 (page 130) and ⇒ Item 12 (page 130) .
– Press differential in direction of clutch housing while turning it eight times.
– Press differential in direction of gearbox housing while turning it eight times.

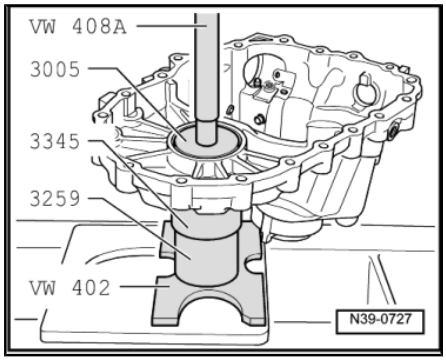

– Attach dial gauge and set to „0“ with 1 mm preload.

A - 30 mm dial gauge extension

– Move differential up and down. Read and note play indicated on dial gauge. (Example: 0.70 mm)

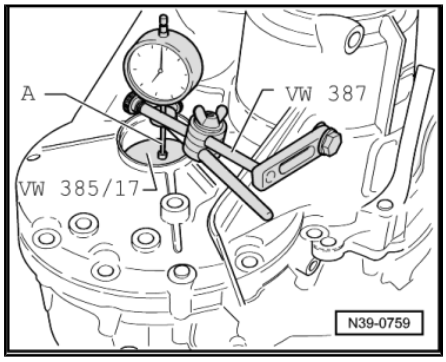

3.2.1 Determining thickness of shim

The specified bearing preload is obtained by adding a constant value for preload (0.25 mm) to the reading obtained.

Example:

Measured value	0.70 mm
+ Preload (constant)	0.25 mm
Thickness of shim =	0.95 mm

– Remove gearbox housing.
– Pull tapered roller bearing outer race out of gearbox housing.

A - Counter support , e.g. -Kukko 22/2-

B - Internal puller, 46 … 58 mm , e.g. -Kukko 21/7-

– Determine part number of shim according to ⇒ Electronic parts catalogue „ETKA“ .
– Insert shims of determined thickness, thickest shim first.

The following shims are available:

Shim thickness (mm)			
0.65	0.85	1.05	1.25
0.70	0.90	1.10	
0.75	0.95	1.15	
0.80	1.00	1.20	

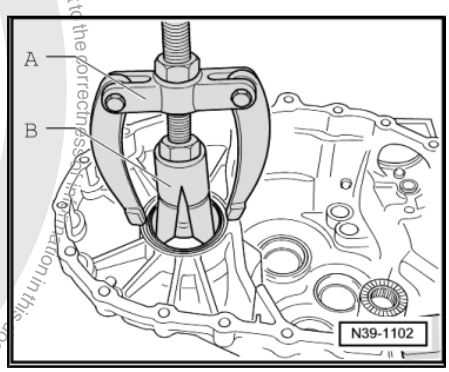

If the size of shim required is larger than those listed in the table, insert two shims totalling the correct figure. When using two shims, install the thicker one first.

The various thicknesses make it possible to achieve the exact shim thickness required.

Protected by copyright. Copyright by Volkswagen AG.

Downloaded from www.Manualslib.com manuals search engine

– Press outer race in again and tighten gearbox housing to specified torque ⇒ Item 11 (page 130) and ⇒ Item 12 (page 130) .

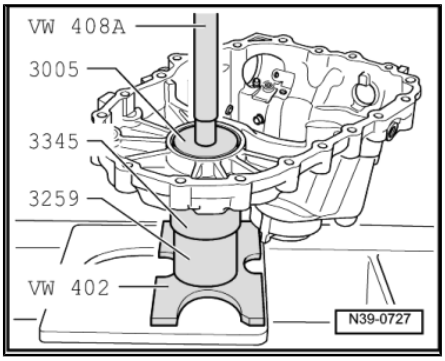

Protected by copyright. Copying for private or commercial purposes, in part or in whole, is not permitted unless authorised by Volkswagen AG. Volkswagen AG does not guarantee or accept any liability with respect to the correctness of information in this document. Copyright by Volkswagen AG.

Downloaded from www.Manualslib.com manuals search engine